CONNECT SYSTEMS INC.
1802 Eastman Ave. Suite 116
Ventura, Ca. 93003

Phone (805) 642-7184
Fax (805) 642-7271

Model TP154-PLUS

Shared Repeater & Interconnect Panel

INSTRUCTION MANUAL

Version 3.03

May 1997

Copyright (C) 1997 By Connect Systems Inc. Made in U.S.A.

TABLE OF CONTENTS

Important Notices 3
The Connections 5
Adjustments 6
Jumper Strap Options 7
Hybrid alignment procedure 9
Phone line connection 10
Programming Information 11
TP154-PLUS Programming 17
  Per Subscriber Programming 18
  Gang Programming 19
  Global Programming 20
  Speed-dialer Programming 26
  Speed-caller Programming 28
Operation
  Using the Repeater 32
  Using the Interconnect 33
Downloading time and hits 39
Display and Rebooting Info 40
Special Test Modes 41
Auxiliary Relay 42
Definition of terms 43
Circuit Description 45
EX-8 Eight Line Expander (Option) 47
Warranty 51
FCC Notice to Users 52

FIGURES, TABLES and SCHEMATIC DIAGRAMS

Figure 1 Hybrid compensation settings 10
Table 1 CW ID Character Codes 14
Table 2 Subscriber Number vs Tone/Code 15
Table 3 Normal / Inverted DCS Codes 16
Table 4 5/6 Tone Codes 30
Table 5 Two Tone codes 31
Table 6 EX-8 Dip Switch Settings 47
EX-8 Schematic diagram 49
EX-8 Hook-up Diagram 50
TP154-PLUS Board Map 54
TP154-PLUS Schematic Diagrams 55

IMPORTANT NOTICES

1. Three Important new features have been added to the TP154-PLUS beginning with this version...

   a) 99 memory speed-dialer
   b) Last number redial
   c) 99 memory speed-caller

   The speed-dialer and redial features are self explanatory.

   The new speed-caller feature eliminates the lengthy overdial codes required on previous versions. Now, up to 99 mobile signalling sequences can be stored and initiated with abbreviated three digit call codes that you can choose. Even complex sequences such as 2 Tone sequential accompanied with a CTCSS/DCS code or a CTCSS/DCS code accompanied with a unique ring alert are initiated with just three digits!

   The new version also retains the signalling modes of previous versions. That is you can set up programming line 91 for m = 1-9 as in previous versions if desired. However the speed-caller feature (m = 10 or 11) is so powerful that use of the previous signalling formats is discouraged.

2. Your TP154-PLUS is equipped with **CTCSS Trak... ,**
   a revolutionary software decoding algorithm that gives the TP154-PLUS unbeatable tone sensitivity and talk down resistance.

   The TP154-PLUS can be set to operate with the standard EIA 38 CTCSS tones or 50 CTCSS tones which include 12 non-standard tones. The TP154-PLUS is factory set (defaulted) at the 38 tone setting.

   We recommend using the EIA 38 tone setting except in one or both of the following circumstances...

   a) You actually need more than 38 tones. Or,

   b) a neighboring system is using some of the non standard tones and you wish to be fully compatible to avoid interference. (Some non standard tones will decode as standard tones if set for 38 tone operation).

3. The TP154-PLUS contains a power supply sensing circuit that continuously monitors the input supply voltage. An instantaneous drop below 12 VDC will cause a microcomputer reset. If the power supply has poor regulation, erratic operation may result.

The purpose of the input voltage sensor is to protect the non-volatile EE memory during power up and power down.

If erratic operation is observed be suspicious of poor regulation from the power supply.

4. Do not attempt any reprogramming until you have your TP154-PLUS up and running. In doing so, you run the risk of a programming error causing a problem you do not understand. The TP154-PLUS can be returned to factory default programming at any time by simply installing jumper JP-6 and turning the power off and back on again. You will see || || || || in the display during the re-initializing process. When the display shows ---- the process is complete. (Please be patient, re-initializing takes approximately 90 seconds). Remove JP-6 and your TP154-PLUS is ready to use, but is re-programmed to factory default settings.

   Should you forget your programming mode access code you will have to return all programming to the factory default values so that you can start over again.

5. When the TP154-PLUS is new, or has been reset to defaults, the repeater and interconnect are enabled for all 154 tones and codes. You may only want perhaps five repeater users enabled and ony two of those with interconnect. When in programming mode, use gang programming commands to turn off all repeater users (*999#04#0#) and all interconnect users (*999#19#0#). Then...

   The Repeater and Interconnect are separately enabled/disabled per subscriber. The command *nnn#04#J# enables/disables the repeater. The command *nnn#19#J# enables/disables the interconnect. This allows you to have all combinations of users with repeater only, interconnect only or both. Please remember when disabling a customer, be sure to turn off both the repeater and the interconnect separately.

6. Some of the features described in this manual have been added as ongoing product improvements. CSI reserves the right to make product changes but assumes no responsibility to upgrade previously sold units. Any TP154-PLUS can be upgraded to include all features described in this manual with firmware upgrade. Please call for quote.

THE CONNECTIONS

Two connections must be made to the receiver and three to the transmitter. Use shielded wires with the shields at each end connected to chassis ground. (The rear panel barrier strip terminals labeled "GND" are chassis ground). We recommend using spade type crimp-on connectors for ease and reliability. Connect the center wires as follows:

RX AUDIO: The audio input terminal should be connected to the receiver discriminator (de-modulator) output.

RX COS: Connect to a point that has good voltage swing when the squelch is opened/closed. The best point to connect is to the collector of the transistor that controls the busy light (if the receiver has one). Otherwise, you may connect to the squelch gate control voltage. Your last choice would be to connect to output of the noise rectifier.

If the point selected goes more positive (voltage increases) when a signal is received, strap JP-10 center to the + side. If the point goes to a lower voltage, strap JP-10 from center to the - side.

When the COS threshold control P4 has been properly adjusted (see page 6), and JP-10 properly strapped (see page 8), the front panel RECEIVE LED will illuminate only when a signal is received. This condition must be achieved for proper operation .

NOTE: The squelch control in the receiver must be set for quiet (squelched) receive. Set the squelch as you would any squelch, but remember if you set it too tight receive sensitivity may suffer.

TX AUDIO: Connect to the transmitter audio input or Mic high line.

PTT: Connect to the transmitter PTT line.

SUBTONE The SUBTONE output is used to inject DCS and CTCSS into the transmitter. The injection point must be after the IDC clipper circuit, and preferably directly to the modulator.

NOTE: For CTCSS operation you may use either a phase modulated or true FM (frequency modulation) transmitter. However only a true FM transmitter will allow DCS operation.

+12 VDC: Connect to a source of 12-14 VDC. The TP154-PLUS is reverse polarity protected, so a polarity mistake will not damage your TP154-PLUS. Connect the return lead (-) to GND.

ADJUSTMENTS

P1 PREAMP: The **PREAMP** control is used to match the audio level from your receiver to the TP154-PLUS. To adjust, a signal containing 100 HZ CTCSS with about 600 HZ deviation should be applied to the receiver. Adjust the PREAMP control until a level of 3V P-P is observed at TP-1 using an oscilloscope. (TP-1 is located near IC U28). If an oscilloscope is not available, TP-1 should read 1V RMS using a VOM. This completes the adjustment of the PREAMP control. Future adjustment should only be required if the TP154-PLUS is connected to a different receiver.

P2 CW ID: **Courtesy beeps & CW ID level:** Adjust for desired modulation level of the courtesy beep and CW ID.

P3 RPT: The **REPEAT AUDIO** control sets the level of the repeat mode voice audio. Set so that 3 khz. input deviation causes 3 khz. output deviation. This will cause a linear input/output relationship.

NOTE: The RPT AUDIO control should only be adjusted after the PREAMP control has been properly adjusted.

P4 COS: The **COS** control sets the COS input threshold level. Measure the voltage at TP-2 with no signal. Then measure the voltage again with a signal applied. Adjust the **COS** control until the voltage reading at TP-3 is approximately midway between the two readings previously obtained at TP-2. (TP-2 and TP-3 are near the COS Potentiometer).

For example: If TP-2 read 2 volts with no signal, and 4 volts with a signal applied to the receiver, TP-3 would be set to read 3 volts.

IMPORTANT: If the COS polarity select strap JP-10 is set correctly and the **COS** control is properly adjusted, the RECEIVE LED will illuminate when there's a signal, and will go out when the signal is removed.

P5 DCS: The **DCS** control sets the modulation level of digital DCS.

P6 CTCSS: The **CTCSS** control sets the modulation level of analog CTCSS.

P7 DTMF: The **DTMF** control adjusts the deviation of the outgoing DTMF transpond and regenerated DTMF. Set for about 2.5 KHz. deviation.

P8 SIGNALING: The **SIGNALING** level control adjusts the level (Transmitter deviation) of Two Tone and 5/6 Tone signaling.

P9 M->L The **Mobile To Land Level** control adjusts the mobile audio level as heard on the telephone.

P10 L->M The **Land To Mobile Level** control adjusts the level from the telephone to the mobile. Press * (or access code) on a mobile unit so that a dialtone is heard. Adjust P10 until the dialtone produces about 3-4 Khz. of modulation deviation. Remove strap JP-2 if required.

P11 SIGNALING DETECT Adjusts the sensitivity of Call Progress Tones and Rotary Signalling detection. Located just to left of relay K2. Also near PROG jack on rear panel.

P12 HYB BAL The **Hybrid Balance** control is used to null out the mobile return audio in full duplex mode. See page 9 for a complete discussion

---

JUMPER STRAP OPTIONS

JP-1 **De-emphasis strap.** (Located near IC U1). The TP154-PLUS should be connected directly to the receiver detector output for optimum performance. If connected properly to the detector then JP-1 should be installed so that the TP154-PLUS can de-emphasize the incoming audio. If you must connect downstream (past the receivers' built-in de-emphasis), you can remove JP-1 to eliminate the TP-154 Plus de-emphasis. Please note that DCS can only operate if connected directly to the detector.

JP-2 **Output level strap.** (Located near the L->M level control). The audio output is selectable in two ranges. With the strap installed, the audio out is 0-1 volt. With the strap removed, the output range is 0-5 volts. The strap should be installed in most installations.

JP-3 **DCS/CTCSS Level strap.** (Located between IC's U5 and U20). The DCS/CTCSS output level is selectable in two ranges. With the strap installed, the level is 0-1 volt. With the strap removed, the output range is 0-5 volts. The strap should be installed in most installations.

JP-4 **PTT Polarity.** (Located to the right of IC U28). This strap gives you a choice of pull to ground (GND), or pull to +12 VDC (POS) for transmitter keying.

NOTE: Pull to GND is the most common keying polarity.

JP-5 **LED Power.** (Located near the POWER led). Removal disables all front panel LEDS (except PTT) and is used to save power in low power applications such as solar powered installations.

JP-6 **Reset Factory Settings.** (Located to the left of microprocessor U17). If you wish to return the programming back to factory settings, simply install this strap and turn the power on. When the initialization begins, the display will show "|| || || ||". When the procedure is complete, the display will show "----". At this point, remove the jumper. The display will blank and the TP154-PLUS is ready to use just as it came from the factory. Please be patient, the re-initializing process takes about 55 seconds.

JP-7 **Auxiliary Relay Contacts.** (Located near fuse F1). Allows selection of normally open (NO), or normally closed (NC) contacts.

JP-8 & JP-9 **Line In Use Detector.** (Both jumpers are located near the heatsink). These two jumpers are used to enable/disable Line In Use detection. These jumpers are mutually exclusive. That is to say that one or the other must be strapped. The TP154-PLUS is delivered with the line in use detection disabled (JP-9 strapped). To enable line in use detection remove the plastic push on clip from JP-9 and re-install on JP-8.

NOTE: The above applies to the TP154-PLUS LINE input. (Shared line). There is no line in use detection for lines coming into EX-8 expanders

JP-10 **COS Polarity Select.** (Located near the DTMF level potentiometer). This strap must be installed in one position or the other. Select the polarity (+ to center or - to center) that causes the REC led to illuminate when a signal is received, and go out when there's no signal. Note that the COS threshold adjustment P4 must first be adjusted.

WHAT IS A HYBRID?

Every telephone has a hybrid (sometimes called a balance network). The purpose of the hybrid is to attenuate the level at which you hear yourself speaking, without affecting your level at the other end.

Various noises in mobile radio communications systems demand that the hybrid in a full duplex terminal should have significantly better performance than a telephone hybrid. Otherwise the full duplex mobile would hear excessive return trip audio (echo) and noise. To achieve optimum trans-hybrid isolation, resistive and capacitive nulling (balance) adjustments are required.

When the hybrid is adjusted to produce minimum return trip audio (optimum adjustment) very little of the residual mobile audio will be heard on the system output in comparison to the telephone party audio. But of course the mobile and the telephone party hear each other perfectly.

Hybrid alignment is only used for full duplex operation. If you will be using only semi-duplex, there is no need to balance the hybrid at all.

HYBRID ALIGNMENT PROCEDURE

The alignment must take place on one of the phone lines the TP154-PLUS will be serving. (This alignment can not be done at the shop prior to delivery to the site).

Have a mobile place a call through the TP154-PLUS into a commonly called area. The party answering the called phone should leave the phone off hook during the alignment procedure.

Monitor the transmitter output with a service monitor or connect an oscilloscope to the 'audio out' terminal on the rear of the TP154-PLUS. Place all four "HYB comp" dip switches in the off position. See Figure 1.

Have the mobile simultaneously press digits 3 and 6 on his touch tone keyboard. This will result in the transmission of a single 1477 HZ tone. (Hybrid alignment will not be possible if the front panel DTMF led is illuminated during alignment.)

Adjust the "HYB BAL" potentiometer (P12) to produce the least audio output. Switch the "HYB comp" dip switches to the next higher capacitance (see Figure 1) and re-null P12. Repeat this procedure until maximum rejection of the 1477 HZ tone is obtained.

Changes made within the telephone company or re-routing of telephone lines could occasionally require re-adjustment of the hybrid.

	HYB COMP SWITCHES 4 3 2 1	COMPENSATION CAPACITANCE
Initial Setting	0 0 0 0	0 uF (min)
|	0 0 0 1	.010
|	0 0 1 0	.022
|	0 0 1 1	.032
increase	0 1 0 0	.050
until	0 1 0 1	.060
optimum	0 1 1 0	.072
null	0 1 1 1	.082
is	1 0 0 0	.100
achieved	1 0 0 1	.110
|	1 0 1 0	.122
|	1 0 1 1	.132
|	1 1 0 0	.150
|	1 1 0 1	.160
V	1 1 1 0	.172
Maximum Setting	1 1 1 1	.182 uF (max)

0 = OFF
1 = ON

FIGURE 1

Table of hybrid compensation settings.

PHONE LINE CONNECTION

The TP154-PLUS is equipped with a standard RJ-11 modular phone jack labeled LINE and may be connected to standard ring-tip loopstart CO lines. The following information must be given to the telephone company prior to connecting:

RINGER EQUIVALENCE: 0.2B

In U.S.A.
FCC REG. NUMBER : 2CAUSA 21178 OT E

In Canada
DOC REG. NUMBER : 2014 6126 A

This equipment may not be connected to coin or party lines. Be sure to notify the phone company when discontinuing use. The line in use feature may not be enabled on lines requiring FCC part 68 or DOC registered apparatus. Please see Appendix A at the back of this manual for additional information.

PROGRAMMING INFORMATION

The TP154-PLUS can be programmed three different ways... locally, remotely over the air, or remotely from any touch phone:

Local Programming: Simply plug any DTMF telephone set into the rear panel RJ-11 jack labeled "PROG". This allows the telephone keypad to act as a programming keyboard. The front panel display will show all keystrokes and programmed data.

DTMF Over The Air Programming: The TP154-PLUS can be programmed over the air from any DTMF equipped radio. A DTMF sequence is transponded in response to each command you enter and is used to display the results of your programming on our CD-2 Decoder Unit (an option that you should have). The data displayed on the CD-2 is identical to the TP154-PLUS front panel display and eliminates any chance of programming errors.

Remote Dial up Telephone Programming: Occasionally the TP154-PLUS will be located out of radio range and over the air programming will not be possible. Simply dial up the shared line and enter your user programmable, programming mode access code. You can now perform any desired remote programming. The TP154-PLUS acknowledges all commands with accept or reject audible feedback. If a command has been accepted, you will hear a single long beep and you may then program the next item. If your command syntax is unacceptable at any point, you will hear a string of short beeps. Press *** which clears your current input and lets you try again. Send #### when through.

Note: The shared line must be set to auto-answer to permit dial-up remote programming.

To Enter and Exit Programming Mode: To enter programming mode you must enter the programming mode access code. The access code consists of six digits plus two leading pounds (##) and a trailing #. The syntax is ##mmmmmm#. The factory default programming access code is 123456 (note that this code is always six digits in length). Therefore, the code required to get into programming mode is ##123456#. This code will be valid unless you have changed the Programming Mode Access Code in the GLOBAL programming area, or by using JP-6 to reset all parameters.

When programming is completed, send #### to exit the programming mode. (If you forget, the TP154-PLUS is designed to self exit three minutes after the last DTMF command).

Desription of available programming modes and areas...

Per subscriber programming allows you to make programming selections on a per user basis. Choices made in this category only affect one user at a time (user nnn).

Gang programming is a special case of "per subscriber programming" which lets you simultaneously program a "per subscriber" parameter

for all nnn users with a single command. This useful feature will save you a great deal of programming work and time.

Global programming are parameters that affect all subscribers and cannot be set individually per subscriber.

Speed-dialer programming allows you to program 99 phone numbers which are useable globally amongst interconnect users.

Speed-caller programming allows you to program 99 signalling memories for use in mobile/mobile signalling and overdialing.

Remote and Local Programming Modes: When the TP154-PLUS receives the program mode access code it checks to see if the code came from a radio, or from a dial up, or from a local telephone keypad. If the code is received from a remote source, the TP154-PLUS goes into Remote Programming mode. If the code comes from a local telephone pad the TP154-PLUS goes into local program mode. The PROG led lights solid in local program mode and blinks on and off when in either type of remote program mode.

In Radio Remote Programming mode the transmitter remains keyed and a beep will be heard about every five seconds to remind you that the TP154-PLUS is still in Program Mode. A DTMF sequence is automatically transponded back in response to each valid command sequence for programming validation on your CD-2 Decoder Unit.

In dial-up programming mode, you will hear a long beep when a command has been accepted. A string of short beeps indicates that you have made an unacceptable entry. Send *** and try again.

In Local Programming Mode, the front panel PROG led is steady on (non-flashing) and the transmitter remains off. Each time you make a programming entry, the results are displayed on the front panel display (rather than a DTMF transpond) for validation.

Command Syntax: When programming, you will enter programming sequences such as *nnn#09#mm#. (This command programs the first character of a subscribers CW ID). Or, *nnn#01#J# which enables or disables a users courtesy beep.

In each case, nnn defines the subscriber number (001-154). See **TABLE 2** to determine Subscriber Number vs Tone/Code, mm is a choice which you may supply and J is always 1 for enable or 0 for disable.

De-limiters (separators) are used to segregate data fields. Every command you program begins with * and then the delimiters that follow are the # symbol.

Leading zeros: Data fields such as nnn, mm, mmmmmm etc. require that you enter the precise number of digits specified. Numbers which have fewer digits than the field calls for will require leading zeros. Example: An nnn (Subscriber Number) field requires three digits. You would enter user number 6 as 006 or user number 84 as 084.

Local Display: The front panel display is active during local or remote programming. The * and # delimiters are displayed as - and || because the display cannot show the * and #. Each time you enter a delimiter the previous information is blanked and the delimiter plus data that follows is displayed. For example: The command *013#09#20# would appear as: -013, ||09, ||20.

Remote Over the Air Data Downloading: The TP154-PLUS will transpond a DTMF validation code each time you send a programming command from your radio and each time you send a specific request for data. These codes will appear on your CD-2 Communications Decoder Unit exactly as they appear on the TP154-PLUS front panel display and give you positive feedback about data entry and how your TP154-PLUS is programmed. The command syntax for data feedback is shown in the programming lists. The left two digits give you the parameter number and the right two digits show the programmed data.

WE HIGHLY RECOMMEND THAT YOU PURCHASE A COMPANION CD-2 AS A PROGRAMMING AID FOR YOUR TP154-PLUS!! Remember that you only need one CD-2 for all your TP-154 and TP154-PLUS panels!

Understanding the programming format: Following is a typical line excerpted from the GLOBAL PROGRAMMING COMMANDS:

	TO PROGRAM	**TO DISPLAY**
STUCK MIKE ACTIVITY TIMER	***000#34#mm#**	***000#34***
mm 01-99 0 to disable (10-990 Secs - 10 sec/step)		[mm=18=180 Secs]

The top bold line identifies the programming parameter, next is the syntax to use for programming the parameter and finally the syntax to use to read this parameter back to the front panel display or to your CD-2.

The subline tells you everything you need to know to program this particular parameter. The first information lets you know the allowable range for mm and that if can you enter zero to disable this parameter altogether. In parenthesis the actual range of adjustment is indicated. If you multiply the value you enter (mm) by the step size you will have the resultant time. The information in brackets [mm = 18 = 180 Secs] is how the TP154-PLUS is programmed when shipped from the factory.

Example: You wish to set the Stuck Mic. Activity Timer to 60 seconds for all subscribers on the system. First, determine the value for mm. This would be 6 (6 times the step value of 10 seconds equals 60 seconds, (The desired value). To make this modification, put your TP-154Plus into program mode and enter the following sequence on your local or remote DTMF keypad: *000#34#06#. (Note the leading zero before the six which must be used).

To read this parameter back on the local display or on your CD-2 simply send: *000#34*. The display command is useful to view how a parameter is currently programmed without changing the current setting.

Resetting your position: If you are distracted or have a lapse and forget where you are in the middle of a command sequence, simply send * three times (***) and start the command sequence over again. Example: You have just entered *000#3 and suddenly you forget where you are. Simply send *** and begin inputting the command over again.

Be organized. We recommend thinking through what you want to program and then writing down the entire sequence of codes you must send including programming mode access code at the beginning and exit code (####) at the end. You may send a request to display any data you wish to see on the local display or remotely on your CD-2 at any time while in programming mode.

TABLE 1 CW ID CHARACTER CODES

A = 0	G = 6	M = 12	S = 18	Y = 24	5 = 30	WORD
B = 1	H = 7	N = 13	T = 19	Z = 25	6 = 31	SPACE= 36
C = 2	I = 8	O = 14	U = 20	1 = 26	7 = 32	
D = 3	J = 9	P = 15	V = 21	2 = 27	8 = 33	SLANT
E = 4	K = 10	Q = 16	W = 22	3 = 28	9 = 34	BAR = 37
F = 5	L = 11	R = 17	X = 23	4 = 29	0 = 35	
						MESSAGE
						END = 38

e.g. CW ID message desired is 'CSI' Enter 2, 18, 8, 38

CW ID characters and corresponding mm values may be obtained from Table 1. The entry immediately following your message must be 38 which means "message stop".

Example: To program KYZ 2584 the following mm sequence is required in character positions 1-8: 10 24 25 27 30 33 29 38

USER	CODE	USER	CODE	USER	CODE	USER	CODE
001	67.0	040	199.5 *	079	156	118	423
002	69.4 *	041	203.5	080	162	119	431
003	71.9	042	206.5 *	081	165	120	432
004	74.4	043	210.7	082	172	121	445
005	77.0	044	218.1	083	174	122	446
006	79.7	045	225.7	084	205	123	452
007	82.5	046	229.1 *	085	212	124	454
008	85.4	047	233.6	086	223	125	455
009	88.5	048	241.8	087	225	126	462
010	91.5	049	250.3	088	226	127	464
011	94.8	050	254.1 *	089	243	128	465
012	97.4	051	023	090	244	129	466
013	100.0	052	025	091	245	130	503
014	103.5	053	026	092	246	131	506
015	107.2	054	031	093	251	132	516
016	110.9	055	032	094	252	133	523
017	114.8	056	036	095	255	134	526
018	118.8	057	043	096	261	135	532
019	123.0	058	047	097	263	136	546
020	127.3	059	051	098	265	137	565
021	131.8	060	053	099	266	138	606
022	136.5	061	054	100	271	139	612
023	141.3	062	065	101	274	140	624
024	146.2	063	071	102	306	141	627
025	151.4	064	072	103	311	142	631
026	156.7	065	073	104	315	143	632
027	159.8 *	066	074	105	325	144	654
028	162.2	067	114	106	331	145	662
029	165.5 *	068	115	107	332	146	664
030	167.9	069	116	108	343	147	703
031	171.3 *	070	122	109	346	148	712
032	173.8	071	125	110	351	149	723
033	177.3 *	072	131	111	356	150	731
034	179.9	073	132	112	364	151	732
035	183.5 *	074	134	113	365	152	734
036	186.2	075	143	114	371	153	743
037	189.9 *	076	145	115	411	154	754
038	192.8	077	152	116	412		
039	196.6 *	078	155	117	413		

TABLE 2
Subscriber Number vs Tone/Code

Users 001-050 are CTCSS.
051-154 are DCS.

NOTE: Your TP154-PLUS can be set for either 38 or 50 CTCSS tone operation in the Global selections area. We highly recommend leaving the unit in 38 tone mode unless it's absolutely necessary that you need to use the 12 non standard tones marked with *.

Normal	Invert	Normal	Invert	Normal	Invert
023	047	223	134	445	043
025	244	225	122	446	255
026	464	226	411	452	053
031	627	243	351	454	266
032	051	244	025	455	332
036	172	245	072	462	252
043	445	246	523	464	026
047	023	251	165	465	331
051	032	252	462	466	662
053	452	255	446	503	162
054	413	261	732	506	073
065	271	263	205	516	432
071	306	265	156	523	246
072	245	266	454	526	325
073	506	271	065	532	343
074	174	274	145	546	132
114	712	306	071	565	703
115	152	311	664	606	631
116	754	315	423	612	346
122	225	325	526	624	632
125	365	331	465	627	031
131	364	332	455	631	606
132	546	343	532	632	624
134	223	346	612	654	743
143	412	351	243	662	466
145	274	356	212	664	311
152	115	364	131	703	565
155	731	365	125	712	114
156	265	371	734	723	431
162	503	411	226	731	155
165	251	412	143	732	261
172	036	413	054	734	371
174	074	423	315	743	654
205	263	431	723	754	116
212	356	432	516		

TABLE 3
Normal / Inverted DCS Codes

It is important to have the DCS decode (input) and DCS encode (output) polarities programmed correctly. The default values are set to normal for incoming and outgoing DCS. The radios you use may need to have incoming and/or outgoing DCS set for inverted polarity.

Example: An incoming 023 code reads as 047. Inverting the DCS Decode Polarity parameter will correct the code. An outgoing code of 212 appears as 356 on your service monitor or CD-2. Simply invert the DCS Encode Polarity to correct.

DCS Polarity Decode and Encode parameters are found in the Global Programming section.

PER SUBSCRIBER REPEATER PARAMETERS	**TO PROGRAM**	**TO DISPLAY**
Affects only subscriber nnn per entry		
LIST ALL PER USER PROGRAMMING ON DISPLAY OR CD-2		***nnn#00***
Downloads entire nnn user file to front panel display.		
COURTESY TONE	***nnn#01#J#**	***nnn#01***
J = 0 = Disabled J = 1 = Enabled		[J = 1 = Enabled]
CTCSS/DCS DURING HANG TIME	***nnn#02#J#**	***nnn#02***
J = 0 = Disabled J = 1 = Enabled		[J = 1 = Enabled]
Note: One second of blank carrier always follows end of tone.		
BARGE IN CONTROL	***nnn#03#J#**	***nnn#03***
J = 0 = Disabled J = 1 = Enabled		[J = 1 = Enabled]
Controls whether the subscriber you are currently programming can be barged in on by subscribers with different tone or code.		
REPEATER ENABLE/DISABLE	***nnn#04#J#**	***nnn#04***
J = 0 = Disabled J = 1 = Enabled		[J = 1 = Enabled]
Enables/disables specific tones or codes for repeater use.		
RESERVE TONE	***nnn#05#J#**	***nnn#05***
J = 0 = Disabled J = 1 = Enabled		[J = 0 = Disabled]
If a subscriber is turned off and reserve tone is enabled, the repeater will come up, but no audio will pass. Beeps indicate reserve tone is active		
HOG PENALTY	***nnn#06#J#**	***nnn#06***
J = 0 = Disabled J = 1 = Enabled		[J = 0 = Disabled]
USERS HANG TIME	***nnn#07#mm#**	***nnn#07***
mm 0-99 (0 - 9.9 Sec's - .1 sec/step)		[mm = 30 = 3 Sec's]
CROSS TONE	***nnn#08#mmm#**	***nnn#08***
Can cross any DCS/CTCSS code nnn to any DCS/CTCSS code mmm. See Table 2.		[nnn=mmm]
CWID SEQUENCE CHARACTER 1	***nnn#09#mm#**	***nnn#09***
CWID SEQUENCE CHARACTER 2	***nnn#10#mm#**	***nnn#10***
CWID SEQUENCE CHARACTER 3	***nnn#11#mm#**	***nnn#11***
CWID SEQUENCE CHARACTER 4	***nnn#12#mm#**	***nnn#12***
CWID SEQUENCE CHARACTER 5	***nnn#13#mm#**	***nnn#13***
CWID SEQUENCE CHARACTER 6	***nnn#14#mm#**	***nnn#14***
CWID SEQUENCE CHARACTER 7	***nnn#15#mm#**	***nnn#15***
CWID SEQUENCE CHARACTER 8	***nnn#16#mm#**	***nnn#16***
CWID SEQUENCE CHARACTER 9	***nnn#17#mm#**	***nnn#17***
CWID SEQUENCE CHARACTER 10	***nnn#18#mm#**	***nnn#18***
	[CHAR 1 - CHAR 10 are defaulted to 38]	

PER SUBSCRIBER INTERCONNECT PARAMETERS

Affects only subscriber nnn per entry

INTERCONNECT ENABLE/DISABLE ***nnn#19#J#** ***nnn#19***
J = 0 = Disabled J = 1 = Enabled [J = 1 = Enabled]
Enables/disables specific tones or codes for interconnect use.

USER PROGRAMMED TOLL RESTRICTS ***nnn#20#J#** ***nnn#20***
J = 0 = Disabled J = 1 = Enabled [J= 0 = Disabled]

USER PROGRAMMED TOLL OVERRIDES ***nnn#21#J#** ***nnn#21***
J = 0 = Disabled J = 1 = Enabled [J = 0 = Disabled]

DUPLEX MODE ***nnn#22#J#** ***nnn#22***
0 = SEMI-DUPLEX 1 = FULL DUPLEX [J = 1 = FULL DUPLEX]

SEMI DUPLEX PRIVACY ***nnn#23#J#** ***nnn#23***
J = 0 = Disabled J = 1 = Enabled [J = 0 = Disabled]
Mobile side of conversation is not heard on repeater output if enabled.

DISCONNECT CODE ***nnn#24#J#** ***nnn#24***
J = 0 = # J = 1 = # + ACCESS CODE DIGITS [J = 0 = #]

MOB TO MOB SIGNALLING ***nnn#26#J#** ***nnn#26***
J = 0 = Disabled J = 1 = Enabled [J = 1 = Enabled]

ACCESS CODE ***nnn#27#mmmmmm#** ***nnn#27***
mmmmmm = 1-999999 [mmmmmm = 000000 = * Connect]
Example: Enter 3467. Access code will then be *3467. To return to * only, enter 000000. Display shows ----.

CALL LIMIT TIMER RESET ***nnn#28#J#** ***nnn#28***
J = 0 = Can't reset J = 1 = Can reset [J = 0 = Can't reset]
Determines whether mobiles are able to reset the call limit timer by pressing * to allow additional talk time.

LINE PORT SELECTION ***nnn#29#mm#** ***nnn#29***
mm = 00 = Shared Line [mm = 00]
mm from table below selects the private phone line you wish to assign to a user. (One or more EX-8 line expanders required).

11	21	31	41	51	61	71	81
12	22	32	42	52	62	72	82
13	23	33	43	53	63	73	83
14	24	34	44	54	64	74	84
15	25	35	45	55	65	75	85
16	26	36	46	56	66	76	86
17	27	37	47	57	67	77	87
18	28	38	48	58	68	78	88

NOTE: There can be up to eight EX-8 Line Expanders connected to a TP154-PLUS providing up to 64 private phone lines in addition to a shared line which can be assigned to any users.

Each line expander has a dip switch to identify it as expander 1-8 and each line expander has inputs for eight separate lines.

The first digit from the table selects the correct expander (same as dipswitch setting). The second digit selects the desired phone line port of that expander. See page 47 for detailed EX-8 information.

Example: You have plugged a subscribers private phone line into expander No. 3 line slot No. 5. Your Line Port selection therefore is 35 for this subscriber.

GANG PROGRAMMING

(Programs all 154 nnn slots at once)

Gang programming allows rapid setting of all 154 tone/code slots to the same setting. This can be used to advantage to speed up the programming process.

For example: When the TP154-PLUS is new, or has been reset to defaults, all 154 tones and codes are enabled. You may only want five tones enabled. First use gang programming to turn off all subscriber tone/codes with a single command by entering *999#04#0#. Then use Per subscriber programming to individually enable the desired tone/code slots.

FUNCTION	TO PROGRAM | V
COURTESY TONE	*999#01#J#
CTCSS DURING HANG TIME	*999#02#J#
BARGE IN CONTROL	*999#03#J#
SUBSCRIBER ENABLE/DISABLE	*999#04#J#
RESERVE TONE	*999#05#J#
HOG PENALTY ENABLE/DISABLE	*999#06#J#
USERS HANG TIME	*999#07#mm#
CROSS TONE all to same tone	*999#08#mmm#
CWID CHARACTER 1	*999#09#mm#
CWID CHARACTER 2	*999#10#mm#
CWID CHARACTER 3	*999#11#mm#
CWID CHARACTER 4	*999#12#mm#
CWID CHARACTER 5	*999#13#mm#
CWID CHARACTER 6	*999#14#mm#
CWID CHARACTER 7	*999#15#mm#
CWID CHARACTER 8	*999#16#mm#
CWID CHARACTER 9	*999#17#mm#
CWID CHARACTER 10	*999#18#mm#
INTERCONNECT enable/disable	*999#19#J#
TOLL RESTRICT	*999#20#J#
TOLL OVERRIDE	*999#21#J#
DUPLEX MODE	*999#22#J#
HALF DUPLEX PRIVACY	*999#23#J#
DISCONNECT CODE	*999#24#J#

Not used (reserved)	***999#25#J#**
MOB TO MOB SIGNALLING	***999#26#J#**
ACCESS CODE	***999#27#mmmmmm#**
CALL LIMIT TIMER RESET	***999#28#J#**
LINE PORT SELECT	***999#29#mm# (mm only 00)**

NOTE: Allow a few seconds for the results to appear on the display after entering a gang programming command. Writing data to memory is slow because all 154 user slots are written.

GLOBAL REPEATER PROGRAMMING PARAMETERS

This programming affects all users at once

	TO PROGRAM	TO DISPLAY
	V	V
LIST ALL GLOBALS ON DISPLAY OR CD-2		***000#00***
Downloads all global parameters to front panel display.		
REPEATER ENABLE/DISABLE	***000#30#J#**	***000#30***
J = 0 = Disabled J = 1 = Enabled		[J = 1 = Enabled]
Can be used to totally eliminate repeater capability if the TP154-PLUS is to be used for interconnect only.		
ANTI-KERCHUNKING TIME	***000#31#mm#**	***000#31***
mm = 01-99 0 to disable .1 sec/step		[mm = 0 = Disable]
If enabled, repeater will not hang unless user keys down at least as long as the time set. Does not affect pick up speed.		
SQUELCH TAIL LENGTH	***000#32#mm#**	***000#32***
mm 00-99 (0-99 Ms - 1 Ms/step)		[mm = 0 = 0 Milliseconds]
Set to 0 for minimum tail. Only used if the receiver has a poor squelch and can stop word clipping by adding squelch delay.		
CTCSS/DCS HOLD DELAY	***000#33#mm#**	***000#33***
mm 03-99 (.3-9.9 Sec's - .1 sec/step)		[mm = 30 = 3 Sec's]
Use the lowest setting possible without introducing talk off.		
STUCK MIKE ACTIVITY TIMER	***000#34#mm#**	***000#34***
mm 01-99 0=disable 10 sec/step		[mm=18=180 Sec's]
DCS ENCODE POLARITY	***000#35#J#**	***000#35***
0 = Normal 1 = Inverted		[mm = 0 = Normal]
Corrects transmitted DCS polarity.		
DCS DECODE POLARITY	***000#36#J#**	***000#36***
0 = Normal 1 = Inverted		[mm = 0 = Normal]
Corrects received DCS polarity.		
HOG PENALTY TIME	***000#37#mm#**	***000#37***
mm 06-99 (60-990 Sec's - 10 sec/step)		[mm = 18 = 180 Sec's]
HOG IDLE TIME	***000#38#mm#**	***000#38***
mm 02-99 (20-990 Sec's - 10 sec/step)		[mm = 06 = 60 Sec's]

HOG MONITOR ***000#39#mm#** ***000#39***
mm 06-99 (60-990 Sec's - 10 sec/step) [mm = 18 = 180 Sec's]
Note: Hog penalties are discussed at length in the Definition of Terms section of this manual.

COR OR DCS/CTCSS OPERATE ***000#40#J#** ***000#40***
J: 0 = DCS/CTCSS 1 = COR [J = 0 = DCS/CTCSS]
NOTE: Operating parameters for COR operation are taken from user file 001. (nnn = 001).

RESPONSE DELAY TO CD-2 ***000#41#mm#** ***000#41***
mm 00-99 (0-9.9 Sec's - .1 sec/step) [mm = 10 = 1 Sec.]
Delays CD-2 data transpond to give your base time to return to receive after entering a command.

PROGRAMMING MODE ACCESS CODE ***000#42#mmmmmm#** ***000#42***
Code must be precisely six digits. [mmmmmm = 123456]
This code is always used to enter programming mode locally, over the air or by dial up.

COURTESY TONE DELAY ***000#43#mm#** **#000#43***
mm 01-99 (.01-.99 Sec's - 10 Ms/step) [mm = 10 = 100 Ms]
Delays courtesy beep delay after mobile drops input carrier.

38 OR 50 CTCSS TONES ***000#44#J#** ***000#44***
0 = 38 Tones 1 = 50 Tones [J = 0 = 38 CTCSS Tones]
Note: Please read discussion on page 3 to help you decide whether to set for 38 or 50 tone operation.

SYSTEM CW ID INTERVAL ***000#45#mm#** ***000#45***
mm 01-99 0 to disable (1-99 Min's - 1 Min/step) [mm=0=Disable]
Determines how often the system will send its call sign when the system is not in use.

USER CW ID INTERVAL ***000#46#mm#** ***000#46***
mm 01-99 0=disable 10 Sec/step [mm=0=Disable]
A subscribers call sign is sent five seconds after picking up the system and then every "CW ID Interval" thereafter.

CW ID SPEED ***000#47#mm#** ***000#47***
mm 04-10 (Increase mm for slower code speed) [mm=05=20 WPM]

CWID SEQUENCE CHARACTER 1 ***000#48#mm#** ***000#48***
CWID SEQUENCE CHARACTER 2 ***000#49#mm#** ***000#49***
CWID SEQUENCE CHARACTER 3 ***000#50#mm#** ***000#50***
CWID SEQUENCE CHARACTER 4 ***000#51#mm#** ***000#51***
CWID SEQUENCE CHARACTER 5 ***000#52#mm#** ***000#52***
CWID SEQUENCE CHARACTER 6 ***000#53#mm#** ***000#53***
CWID SEQUENCE CHARACTER 7 ***000#54#mm#** ***000#54***
CWID SEQUENCE CHARACTER 8 ***000#55#mm#** ***000#55***
CWID SEQUENCE CHARACTER 9 ***000#56#mm#** ***000#56***
CWID SEQUENCE CHARACTER 10 ***000#57#mm#** ***000#57***
[CHAR 1 - CHAR 10 are defaulted to 38]

CW ID characters and corresponding mm values may be obtained from Table 1. The entry immediately following the callsign must be 38 which means "message stop".

Example: To program KYZ 2584 the following mm sequence is required in character positions 1-8: 10 24 25 27 30 33 29 38.

GLOBAL INTERCONNECT PROGRAMMING PARAMETERS

This programming affects all users at once

LINE IN USE DETECT ***000#58#J#** ***000#58***
J = 0 = Disabled J = 1 = Enabled [J = 0 = DISABLED]
If enabled prevents a mobile from accidentally cutting in on a call in progress on the same line. The Line in Use Detector operates only on the shared LINE input.

DIALING MODE ***000#59#J#** ***000#59***
0 = PULSE, 1 = TONE [J = 1 = TONE]

ACTIVITY TIMER ***000#60#mm#** ***000#60***
mm = 10-99, 0=Defeat (10-99 Sec's 1 Sec/step) [mm=30=30 Sec's]

CALL LIMIT TIMER ***000#61#mm#** ***000#61***
mm=1-99, 0=Defeat (10-990 Sec's 10 sec/step [mm=18=3 Minutes]

CW ID ***000#62#J#** ***000#62***
0 = Disconnect, 1 = Connect and Disconnect [J = 0 = Disconnect]

BUSY SIGNAL DISCONNECT ***000#63#J#** ***000#63***
J = 0 = Disabled J = 1 = Enabled [J = 1 = Enabled]
If enabled, a busy signal occurring during a call will cause disconnect.

DIALTONE DISCONNECT ***000#64#J#** ***000#64***
J = 0 = Disabled J = 1 = Enabled [J = 1 = Enabled]
If enabled, a dialtone occurring after a call has been established will cause disconnect.

AUX. RELAY ***000#65#n#** ***000#65***
n = 0-2 [n = 0 = Close On Connect]
0 = Connect 1 = Key 2 = Remote function

REMOTE FUNCTION ACCESS CODE ***000#66#mmm#** ***000#66***
Relay control code must be exactly three digits. [mmm = 321]
NOTE: See page 42 for details on programming the Aux. Relay.

GLOBAL TOLL RESTRICT SELECTIONS

This programming affects all users. Examples of useful restricts are: 1, 0, 976, 411 etc.

PREFIX RESTRICT A ***000#67#mmmm#** ***000#67***
One To Four Digit Toll Restrict [mmmm = 0000 = - = None]

PREFIX RESTRICT B ***000#68#mmmm#** ***000#68***
One To Four Digit Toll Restrict [mmmm = 0000 = - = None]

PREFIX RESTRICT C ***000#69#mmmm#** ***000#69***
One To Four Digit Toll Restrict [mmmm = 0000 = - = None]

PREFIX RESTRICT D ***000#70#mmmm#** ***000#70***
One To Four Digit Toll Restrict [mmmm = 0000 = - = None]

PREFIX RESTRICT E ***000#71#mmmm#** ***000#71***
One To Four Digit Toll Restrict [mmmm = 0000 = - = None]

PREFIX RESTRICT F ***000#72#mmmm#** ***000#72***
One To Four Digit Toll Restrict [mmmm = 0000 = - = None]

GLOBAL TOLL OVERRIDE EXCEPTIONS

This programming affects all users. An example of a useful toll override is; 1800 which allows dialing toll free numbers even though 1+ is restricted. You can also program overrides to allow dialing to area codes which are adjacent to your area of operation or to specific exchanges within an area code.

PREFIX OVERRIDE A ***000#73#mmmmmmmm#** ***000#73***
One To Eight Digit Toll Enable [mmmmmmmm = - = 00000000 = None]

PREFIX OVERRIDE B ***000#74#mmmmmmmm#** ***000#74***
One To Eight Digit Toll Enable [mmmmmmmm = - = 00000000 = None]

PREFIX OVERRIDE C ***000#75#mmmmmmmm#** ***000#75***
One To Eight Digit Toll Enable [mmmmmmmm = - = 00000000 = None]

PREFIX OVERRIDE D ***000#76#mmmmmmmm#** ***000#76***
One To Eight Digit Toll Enable [mmmmmmmm = - = 00000000 = None]

PREFIX OVERRIDE E ***000#77#mmmmmmmm#** ***000#77***
One To Eight Digit Toll Enable [mmmmmmmm = - = 00000000 = None]

PREFIX OVERRIDE F ***000#78#mmmmmmmm#** ***000#78***
One To Eight Digit Toll Enable [mmmmmmmm = - = 00000000 = None]

BUSY CHANNEL MONITOR ***000#79#J#** ***000#79***
J = 0 = Disable J = 1 = Enable [J = 1 = Enable]
Checks to see if channel is busy prior to ringout or autoanswer to avoid interference.

RINGOUT ONCE OR CONTINUOUS ***000#80#J#** ***000#80***
J=0=One Ring J=1=Continuous ring [J=1=Continuous Ring]
Selects either a single event ringout or continuous ringing from either the shared line or from EX-8 expanders (if used). A built-in timer limits continuous ringing to 20 seconds if a mobile fails to respond.

Note: In order to not waste time on shared systems, ringout always begins on the first incoming ring from all calls received through an EX-8 expander. This is not programmable. The following choice allows ringout to begin on the 1-9 ring on the shared line input (port 00) since ringout on this line would only be used on private single user systems.

GLOBAL INCOMING CALLS FROM SHARED LINE
Affects all users set for port 00 (Shared line port)

RINGOUT ON RING NUMBER ***000#81#m#** ***000#81***
m = 0 = Disable m = 1 - 9 [m = 1 = ringout on first ring]
Set to 0 if autoanswer is enabled to allow overdialing. This setting does not affect EX-8 lines which ringout on first ring.

RINGOUT CTCSS or DCS CODE ***000#82#mmm#** ***000#82***
m = 001-154 [m = 001 = 67.0 Hz. CTCSS]
Selects which CTCSS or DCS code (nnn from Table 2) is used to accompany ringout alert from shared line (Port 00).

AUTOANSWER RING NUMBER ***000#83#m#** ***000#83***
n = 0 - 9, 0 = Disable (1 - 9 rings) [n = 0 = Disable]
Sets which incoming ring will autoanswer to allow selective calling by overdialing and to also allow remote programming.

IMPORTANT: Please be aware that ringout from incoming calls on the expander ports always occurs on ring number 1.

NOTE: It is not an error that programming line number 83 (AUTOANSWER RING NUMBER) suddenly jumps to line 91 (OVERDIAL MODE). This was done because line 91 and line 92 were features added to the TP154-PLUS.

SIGNALLING MODE ***000#91#mm#** ***000#91***
Default: [m = 10 = Speed-caller initiated with DTMF only]
Select: M=10 Speed-caller initiated with DTMF only
M=11 Speed-caller initiated with DTMF or Pulse dial.

Selects whether the speed-caller will respond to DTMF only, or DTMF/Pulse overdial. The speed-caller can store up to 99 signalling sequences which are initiated with three digit call codes.

CARRIER DROP DELAY ***000#92#mm#** ***000#92***
mm = 00-99, (0 - .99 Sec's 10 Ms./step) [mm = 99 = .99 Sec's]

Adjusts how long carrier remains on after CTCSS/DCS drops at end of hangtime. Keeping the carrier on quiets the mobile while the mobile CTCSS/DCS decoder is dropping and allows the repeater to go off without a squelch tail heard. The default value is .99 seconds and probably will not need to be changed.

Note: The carrier drop delay is additive to hangtime and in effect increases the total beyond the value set for hangtime.

5/6 TONE SET UP
Affects all subscribers signalled by 5/6 Tone

NOTE: There is no need program these selections unless you will be using 5/6 Tone signalling.

FIVE TONE PREAMBLE ***000#84#J#** ***000#84***
J = 0 = Disable J = 1 = Enable [J = 0 = Disable]
If enabled, the preamble tone (programmed next step) will precede the 5 Tone sequence.

PREAMBLE TONE ***000#85#m#** ***000#85***
m = 0 - 9 Select Tone 0-9 [m = 0 = Tone 0]

FIRST TONE SELECT ***000#86#m#** ***000#86***
m = 0 - 9 Select Tone 0-9 [m = 0 = Tone 0]
Selects first tone of five tone sequence.

SECOND TONE SELECT ***000#87#m#** ***000#87***
m = 0 - 9 Select Tone 0-9 [m = 0 = Tone 0]
Selects second tone of five tone sequence.

REPEAT SEQUENCE ***000#88#m#** ***000#88***
m = 1 - 9 Repeat tone sequence 1-9 times. [m = 1]

DURATION OF TONES ***000#89#mm#** ***000#89***
mm = 0 - 99 Duration of each tone in Milliseconds. [mm = 33]

GROUP SELECT ***000#90#m#** ***000#90***
mm = 1-5 Selects appropriate 5 Tone standard. [mm = 1 = EIA]
Select: 1 = EIA 2 = ZVEI1 3 = CCIR/EEA 4 = CCIT 5 = EURO

SPEED-DIALER PROGRAMMING

Up to 99 phone numbers can be stored in the TP154-PLUS speed-dialer memory. The numbers can be up to 16 digits each.

When programming the speed-dialer, you must supply the memory location and the phone number you want in that memory.

The programming format is as follows:

	To Program	**Display**
	V	**V**
SPEED-DIALER MEMORY 1	***888#01#number#**	***888#01***
SPEED-DIALER MEMORY 2	***888#02#number#**	***888#02***
.	.. ..	..
.	.. ..	..
.	.. ..	..
SPEED-DIALER MEMORY 99	***888#99#number#**	***888#99***

The "number" is the phone number you wish to store in each memory location.

Examples:

1. ***888# 05# 18185551212#** (gaps shown for clarity only)

888	Indicates speed dial programming
05	Speed-dialer memory 5
1 818 555 1212	Phone number stored in memory 5

2. ***888# 91# 911#** (gaps shown for clarity only)

888	Indicates speed dial programming
91	Speed-dialer memory 91
911	Phone number stored in memory 91

3. ***888# 17# 5551212#** (gaps shown for clarity only)

888	Indicates speed dial programming
17	Speed-dialer memory 17
555 1212	Phone number stored in memory 17

To erase a speed dial number, use the command *888#nn##. As an example, to erase the number "555-1212" previously entered in location 17, use the command: ***888#17##**

888	Indicates speed dial programming
17	Speed-dialer memory 17
##	erase speed dial memory location

To initiate a speed-dialer call: The user simply precedes the access code with the desired one or two digit memory number. When through, simply send the appropriate disconnect code (# or # plus connect code digits as programmed). As an example, the command 9* will speed dial memory location 9 if the access code is "*". If the access code is 275, then the command 9*275 will speed dial memory location 9.

To redial the last number called: Simply precede the access code with 0. As an example, the command 0* will speed dial the last telephone number called if the access code is "*". If the access code is 275, then the command 0*275 will automatically re-dial the last telephone number called.

Note: Redial can only be used by the user code nnn that originally dialed the number. This feature enhances privacy and prevents other users from harassing your friends or clients.

SPEED-CALLER PROGRAMMING

The TP154-PLUS can send complex signalling sequences in response to three digit call codes overdialed by a land caller or used for mobile/mobile signalling. The speed-caller is only functional if the SIGNALLING MODE (parameter 91) is set to a 10 or 11.

When programming the speed-caller, you enter the desired three digit call code, the signalling sequence that results from using it and the speed-caller memory location that stores it. You can even select signalling only, or signalling followed by one way voice!

This scheme allows abbreviated three digit calling of any/all sequences and allows substituting new codes if an employee is assigned to a new mobile.

The programming format...	**To Program**	**Display**
	V	**V**
SPEED-CALLER MEMORY 1	***777#01#sequence#**	***777#01***
SPEED-CALLER MEMORY 2	***777#02#sequence#**	***777#02***
.	..	..
.	..	..
.	..	..
SPEED-CALLER MEMORY 99	***777#99#sequence#**	***777#99***

The actual "sequence" to insert varies a bit for each of the five signalling formats...

DCS/CTCSS:	cccnnn0r	signalling only
	cccnnn4r	signalling + one way voice
2 Tone :	cccnnn1gtgt	signalling only
	cccnnn5gtgt	signalling + one way voice
5/6 Tone :	cccnnn2ttt	signalling only
	cccnnn6ttt	signalling + one way voice
DTMF :	cccnnn3d..d	signalling only
	cccnnn7d..d	signalling + one way voice

Where: ccc Is the desired three digit calling code. You may select any number 000 - 999

nnn Is the DCS/CTCSS tone you wish to accompany the signalling code from Table 2. nnn = 000 if you do not want any CTCSS/DCS to accompany signalling.

r Is a choice of six ring alerts to accompany DCS/CTCSS signalling. (Not available for DTMF, 2 Tone or 5/6 Tone)...

1 One long ring.
2 Two Short rings.
3 Three short rings.
4 Two quick rings pause then two more quick rings.
5 Short ring followed by a long ring.
6 Long ring followed by a short ring.

Gtgt First gt is the group No. and tone No. for Tone A. Second gt is the group No. and tone No. for Tone B.

ttt Is the last three digits of the five tone sequence. See Table 4. Note, the first two digits and all other 5/6 Tone parameters are programmed under; 5/6 Tone Set Up beginning with parameter "FIVE TONE PREAMBLE *000#84#j#" page 25.

d..d Is a DTMF sequence which may be from 1-7 digits in length.

Complete examples:

1. *777# 01# 999 001 0 2# (gaps shown for clarity only)

777 indicates speed call function
01 Speed caller memory used to store the following data:
999 Three digit speed-call code
001 67 Hz CTCSS tone signalling with selectable ring alert
0 Signalling only, no one way voice
2 Two short rings for alerting

2. *777# 75# 863 117 1 621# (gaps shown for clarity only)

777 indicates speed call function
75 Speed caller memory used to store the following data:
863 The three digit call code to be used
117 DCS 413 to accompany the signalling sequence
1 Selects 2 Tone signalling without one way voice
1467 Sends tones 410.8 and 1357.6

3. *777*23#215 019 7 13924# (gaps shown for clarity only)

777 indicates speed call function
23 Speed caller memory used to store the following data:
215 The three digit call code to be used
019 123 Hz CTCSS to accompany the signalling sequence
7 Selects DTMF signalling followed with one way voice
13924 Is the DTMF sequence to be sent. May be 1-7 digits.

To erase a speed call number, use the command *777#nn##. As an example, to erase the number previously entered in location 23, use the command ***777#23##**

Select Tone #	1 EIA	2 ZVEI1	3 CCIR/ EEA	4 CCIT	5 EURO	6 ZVEI2
0	600	2400	1981	400	980	2400
1	741	1060	1124	697	903	1060
2	882	1160	1197	770	833	1160
3	1023	1270	1275	852	767	1270
4	1164	1400	1358	941	707	1400
5	1305	1530	1446	1209	652	1530
6	1446	1670	1540	1336	601	1670
7	1587	1830	1640	1477	554	1830
8	1728	2000	1747	1633	511	2000
9	1869	2200	1860	1800	471	2200
R	459	2600	2110	2200	1063	970

TABLE 4
5/6 TONE SEQUENTIAL CODES

The following setup choices must be made in the 5/6 Tone Set Up programming area...

The preamble tone can be enabled at "FIVE TONE PREAMBLE" and the desired preamble tone selected at "PREAMBLE TONE."

The first two tones of a 1000 call five tone sequence are selected from the appropriate group and entered at "FIRST TONE SELECT" and "SECOND TONE SELECT." These two tones will automatically be sent with each selective call.

To increase the probability of successful signaling, the five tones can be automatically repeated up to nine times at "REPEAT SEQUENCE."

Select the desired time duration of each tone at "DURATION OF TONES."

Select the desired group from one of the six tone groups from the table above and enter at "GROUP SELECT."

The third, fourth, and fifth tones of the five tone sequence become the selective call CAP code and are selected under the chosen operating group.

Example: A pager sequence of 1023, 1305, 1587, 741 and 1446 Hz is required. Enter 0 (Disable) on line 61. Enter 3 on line 63. Enter 5 on line 64. Enter 1 (EIA) on line 67. The three digit selective call code is then = 716.

TWO TONE GROUP SELECTION TABLE

TONE SEL	MOT GPA	MOT GP1	MOT GP2	MOT GP3	MOT GP4	MOT GP5	MOT GP6	GE GPA	GE GPB	GE GPC
0	358.9	330.5	569.1	1092.4	321.7	553.9	1122.5	682.5	652.5	667.5
1	398.1	349.0	600.9	288.5	339.6	584.8	1153.4	592.5	607.5	712.5
2	441.6	368.5	634.5	296.5	358.6	617.4	1185.2	757.5	787.5	772.5
3	489.8	389.0	669.9	304.7	378.6	651.9	1217.8	802.5	832.5	817.5
4	543.3	410.8	707.3	313.0	399.8	688.3	1251.4	847.5	877.5	862.5
5	602.6	433.7	746.8	953.7	422.1	726.8	1285.8	892.5	922.5	907.5
6	668.3	457.9	788.5	979.9	445.7	767.4	1321.2	937.5	967.5	952.5
7	741.3	483.5	832.5	1006.9	470.5	810.2	1357.6	547.5	517.5	532.5
8	822.2	510.5	879.0	1034.7	496.8	855.5	1395.0	727.5	562.5	577.5
9	912.0	539.0	928.1	1063.2	524.6	903.2	1433.4	637.5	697.5	622.5
DG	569.1	569.1	979.9	569.1	569.1	979.9	979.9	742.5	742.5	742.5

The built-in (standard) two tone sequential supports Motorola and GE 99, etc. Other Two Tone formats may be available at extra cost. Please contact Connect Systems Inc. for details.

Two tone sequential sequences are programmed into the speed caller using a four digit sequence consisting of the group and tone for the first tone, and then the group and tone of the second tone (gtgt, see below). We allow you to program tones using a four digit format rather than conventional three digit cap code format because it allows you to use tone A from one group and tone B from a different group if desired.

For example: The selective call code required to generate tone A = 296.5 and tone B = 1006.9 would be: 3237. See the Speed Calling section and Receiving incoming calls for more details.

Note: 1. Tone duration: Tone A = 1 second, Tone B = 3 seconds.

USING THE REPEATER...
The TP154-PLUS will respond to any combination of CTCSS or DCS codes that have been enabled, up to 154. Additionally, the TP154-PLUS will exhibit all of the per subscriber and globally programmable characteristics that have been left at factory default or changed to user programmed settings. The programming choices have annotations which briefly explain how each choice affects operation. Some choices are so self evident that further explanation is unnecessary.

The TP154-PLUS offers two very powerful DTMF commandable features for repeater users...

Temporary cross tone: A subscriber can initiate a call to any other user group on the system by sending a DTMF command which will cross a subscribers tone or code to any other tone or code. Yes, you can even cross CTCSS to DCS or DCS to CTCSS! To initiate temporary cross tone, simply use the following format...

nnn#0

Where nnn is the subscriber code you wish to cross to. Please see Table 2 for a listing of subscriber codes (nnn) vs CTCSS or DCS codes. For example, to temporarily change your output code to 100.0 Hz. CTCSS simply enter 013#0.

The temporary code will automatically revert back to your normal code when hang time expires. Or, you can change your code back to normal at any time by sending...

######

Mobile to mobile signalling: Any mobile or portable having a DTMF pad can selectively signal other mobile or portable units by sending the appropriate three digit call code followed by #...

ccc#1

Where ccc is the three digit call code that initiates the desired signalling sequence. The signalling sequences and the abbreviated three digit call codes for each mobile must be preprogrammed into the 99 memory speed-caller.

CW ID: The TP154-PLUS provides two separate types of Morse station identification...

Subscriber CW ID: The TP154-PLUS can store up to a ten character callsign for each of up to 154 subscribers using the system. The callsign is automatically sent five seconds after a subscriber begins using the system and then every User CW ID Interval thereafter. The User CW ID Interval is globally programmable in ten second steps from 10 seconds to 990 seconds.

System CW ID: The TP154-PLUS can also store the callsign of the repeater. The callsign must be entered as a globally programmable parameter and an ID interval from 1-99 minutes must also be entered. The callsign is transmitted on a non interfering basis. The TP154-PLUS first checks to make sure the channel is clear. If so, the callsign is sent at the first opportunity after each interval elapses. The TP154-PLUS will not recognize a subscriber during the 4-6 seconds it takes to complete the ID. This should not pose a tangible problem because ID will probably be set to occur at about 30 minute intervals and ID will not occur if the system is already in use.

USING THE INTERCONNECT...

The TP154-PLUS will allow any of the 154 possible system users to initiate and receive phone calls using the built-in Duplex Interconnect if they have been programmed as interconnect enabled subscribers.

There are many per subscriber and globally programmable parameters which affect how the interconnect will operate and serve various users on the system. When needed, the programming lines have annotations which briefly explains how each choice affects interconnect operation.

There are two categories of interconnect users:

1. Those using the shared line, and
2. Those using private phone lines.

Initiating Calls on the Shared Line:

The TP154-PLUS can be programmed to dial with either Pulse, or fully regenerated DTMF. All subscribers using the 'shared line' must be programmed to operate on line port 00 (Default setting). Subscribers using the shared line initiate and receive calls on this line. The shared line is the RJ-11 jack labeled "LINE" on the rear of the TP154-PLUS.

To initiate a call, a user simply enters his/her access code, (* is the default code. Access codes can be individually programmed per subscriber), and then dials the intended phone number when dialtone is heard. When through, simply send the appropriate disconnect code (# or # plus connect code digits as programmed).

Line in use detect: This feature is only functional on the shared line and only if phones also share the line. If a mobile attempts to access and the line is being used by a phone on the line, an artificial busy signal indicates to the mobile that someone is using the phone line. The TP154-PLUS does not cut in on the call.

NOTE: There is no "line in use" detection for phone lines brought in through EX-8 Expanders.

Pulse dialing with delayed dialtone: In some areas the first or subsequent dialtones may not occur immediately upon request. Additionally, there may be the need to overdial DTMF into the final destination to dial a PBX extension or to make a selection from a menu.

Your TP154-PLUS has a built-in solution to these dilemmas. If the initial dialtone is delayed such that you cannot begin dialing within ten seconds, enter a * immediately after you send your connect code. This will cause the TP154-PLUS to give you up to three minutes to begin dialing the first dialtone. If the second (or subsequent) dialtones are also delayed, append a * to the end of each group which will allow up three minutes to begin dialing the next dialtone. Do not append the final phone number with * so that additional dialing after the phone number answers will be regenerated DTMF rather than pulse.

EXAMPLE: You wish to pulse dial 011 52 5551212 but the first and subsequent dialtones are delayed 5-25 seconds. First enter your connect code then enter *. After the first dialtone is heard dial 011*, after the next dialtone is heard dial 52*, after the next dialtone is heard dial 5551212. Note there is no * added to the last group. If desired, you can then overdial PBX features with DTMF.

Note: The above instructions only apply if the TP154-PLUS has been programmed to dial in pulse format, and your telephone system does not respond with immediate dialtone.

Incoming calls to subscribers on the Shared Line:

Overdialing from DTMF telephones: A telephone caller can selectively signal any mobile or portable unit by sending the appropriate three digit call code after the auto-answer beep:

ccc

Where ccc is the three digit call code that initiates the desired signalling sequence. The signalling sequences and the abbreviated three digit call codes for each mobile must be preprogrammed into the 99 memory speed-caller.

Paging plus one way voice: When you program a user's signalling and three digit call code into the speed-caller you can also set-up to allow one way voice from land to mobile/pager if desired.

Overdialing from pulse phones: Programming line 91 must be set-up for the desired " SIGNALLING MODE". Enter 10 for DTMF only overdial, or enter 11 to allow DTMF or Pulse overdialing.

To overdial from a dial pulse phone simply precede the desired mobiles three digit call code with the number zero after the auto-answer beep:

0ccc

OPTIMIZING PULSE DIAL SIGNALLING:

The **SIGNALLING DETECT** control (P11) must be adjusted for optimum signalling accuracy. The TP154-PLUS has a special test mode to facilitate this adjustment. (P11 is just to the left of relay K2)

Put the TP154-PLUS into program mode using either local or remote programming and then enter...

***000#99#**

This command invokes the overdial alignment mode. Next, dial the phone number of the TP154-PLUS from another line. The TP154-PLUS will automatically answer and a beep will be heard.

It is now possible to rotary overdial any digits from the remote phone and observe each digit displayed on the front panel of the TP154-PLUS.

While dialing digits from the remote phone and checking the accuracy with the front panel display, adjust P11 "SIGNALLING DETECT" to find the range of adjustment that permits accurate detection of dial clicks. Set P11 to the center of the usable range.

NOTE: Accurate detection of dial clicks may not be achievable on noisy phone lines.

When through, pressing any DTMF digit (from the same source you used to enter program mode) will exit the Rotary Signalling set-up mode which will return you to program mode. Press #### to exit programming mode if desired.

The setting of P11 "SIGNALLING DETECT" also affects the detection of call progress tones such as dialtone and busy signals. If the dial click set-up stops automatic disconnect on busy signals and/or dialtone then turn P11 up just slightly, but not so much that rotary detection accuracy is affected.

Private Phone Lines: When the TP154-PLUS is used with EX-8 Line Expanders, each of up to 64 subscribers can have his or her own private phone line or OPX line if that is preferable to using the shared line. One EX-8 is needed for each eight phone lines.

A dip switch in each EX-8 must be set to give each EX-8 a unique address. Therefore an EX-8 having a dip switch setting of 3 would contain the following line port numbers:

Line 1 = 31	Line 5 = 35
Line 2 = 32	Line 6 = 36
Line 3 = 33	Line 7 = 37
Line 4 = 34	Line 8 = 38

As can be seen, the dip switch setting becomes the first digit of the line port number and the second digit is the line number within that particular EX-8.

Each subscriber must be programmed to use a unique line port. Subscribers using the shared line are set to port 00 (which is the default port for each subscriber). Subscribers having a private phone line must be programmed so that their port number agrees with the actual port their phone line is plugged into. For example: If a subscribers line is plugged into Line 4 of EX-8 with dip switch setting five, then that user would be set to port 54.

Note: More details on EX-8 set-up will be found in the EX-8 portion of this manual (page 47).

Once set up, the TP154-PLUS behaves like a private phone patch for each user.

Out going calls: A user with a private line makes outgoing calls precisely the same as a shared line user. The TP154-PLUS automatically selects the correct line port based upon setup programming and CTCSS/DCS code of the mobile. The mobile simply enters his personal access code and dials after dialtone is heard. A disconnect command (# or # plus connect code digits must be sent when the call is finished.

Incoming calls: Each EX-8 line port automatically rings out to the correct CTCSS or DCS code and sounds like a phone ringing in the mobile. The mobile simply keys the mic button to answer the call. DTMF is not required!

NOTE: There is no need (or ability) to overdial into any EX-8 port. Only the shared line autoanswers and accepts overdialing.

More on interconnect operation...

Thus far we've covered the differences between shared line and private phone line operation. The rest to follow operates the same for either shared or private line subscribers.

Dialing with the Speed-dialer: To dial a phone number that is stored in the speed-dialer, simply precede the access code with the appropriate speed-dialer memory number. The speed-dialer uses memories 1 - 99. Examples;

Entry	Effect
23*	dials memory 23, access code = *
2*	dials memory 2, access code = *
9*2738	Dials memory 9, access code = *2738

Using last number redial: To redial the last number the TP154-PLUS has called, simply precede the access code with 0. Using redial is precisely the same as using the speed-dialer except memory 0 is used. Examples;

```
0*
0*2738
```

Toll restricts: There are six separately programmable restricts which can be sequences of from 1 to 4 digits each. Examples of restricted sequences on a typical system might be...

```
1      Prevents 1+ long distance calls
0      Prevents dialing operator to place calls
976    Prevents dialing cost per call "services".
911    Prevents dialing 911 emergency numbers
411    Prevents dialing to directory assistance.
```

Toll overrides: There are six separately programmable toll override exceptions which can be sequences of from 1 to 8 digits each. These are used to permit specific toll override capability. For example, you may wish to allow dialing into specific exchanges within another area code, or to permit 1-800 calls which are free to the caller. Here are some examples...

```
1800     Allows dialing 1-800 numbers.
1704636  Allows dialing to exchange 636 within area code 704.
18185    Allows dialing all numbers beginning with 5 in area
         code 818.
121248   Allows dialing all numbers beginning with 48 in area
         code 212.
```

Although the six programmable restricts and the six programmable overrides are globally programmable, the ability to use either is separately programmable on a per subscriber basis. You will probably want the shared line well protected, however some subscribers with private lines may not want to be restricted at all. That should not be a worry to the system operator because subscribers with private lines are responsible directly to the phone company for all calls they place.

Activity timer: The activity timer can be set anywhere from 10 to 99 seconds. This timer automatically aborts a call if the mobile does not transmit often enough to keep the timer reset. Single beeps occurring at about two second intervals warn that a disconnect will soon occur. The mobile need only press the Mic. button to reset the timer.

Call limit timer: The call limit timer can be set anywhere from 10-990 seconds (16.5 minutes). Two quick beeps in rapid succession heard at three second intervals warn that your call will disconnect within 20 seconds. The call limit timer is resettable by sending * if the user is programmed to be able to do so. Otherwise, the call will terminate at three minutes or whatever time has been set.

Hookflash: This feature is only available on the private lines which come through EX-8 expanders. Simply send ******* which will generate a precise 570 Ms. flash to operate call waiting, etc.

Half duplex privacy: The TP154-PLUS can be set for either full or half duplex per subscriber. If Half duplex is programmed, you can then select whether half duplex operates in regular or privacy mode per subscriber as the standard condition for that subscriber. However, by sending a DTMF command, a subscriber can temporarily switch to the opposite condition as need indicates. Here are the commands to use...

Half duplex privacy on: ***1**
Half duplex privacy off: ***0**

The subscribers programmed half duplex privacy condition (enabled or disabled) will automatically revert to the programmed condition at the completion of the current call.

Busy signal and dialtone disconnect: These two features are a convenience which can be individually enabled or disabled on a global basis. When enabled, a call will automatically disconnect if the number dialed is busy, or if a dial tone occurs after a number has been dialed. You may want to disable dialtone disconnect if subscribers will be dialing second dialtones to place credit card calls etc.

CW ID: The individual subscriber callsign is sent automatically when the subscriber disconnects. Additionally, you have the choice of programming it to occur at both connect and disconnect if desired.

Note: The connect and disconnect choice consumes more airtime and can be aggravating if one is in a hurry to place a call.

DOWNLOADING TIME AND HITS

Subscriber repeater airtime, Subscriber interconnect airtime, and Hits per tone or code can be easily downloaded to your CD-2 for review. You can request data in blocks by specifying a user segment, for example from user No. 020 through user No. 045. Separate commands allow resetting (zeroing out) these parameters as required. First, you must put the TP154-PLUS into program mode. The command to download any set of desired parameters is:

***nnn#mmm#K#**

Where: nnn Is the lower end of the desired range of user numbers.
mmm Is the upper end of the desired range of user numbers.
(See Table 2 for user number vs tone/code)
K Selects the type of data you wish to display. See choices below.

NOTE: If using a CD-2 with CD-2P software on your computer, the downloaded data is stored in a file and can be printed.

When a valid download command is entered, the TP154-PLUS first responds with a display of the lower range value, then the upper range value and finally the K choice. Afterward each nnn is displayed followed by the corresponding data value as determined by choice K. The data is displayed the exactly same on the front panel display or on a CD-2 at a remote site.

K = 1 Recovers hits for all enabled codes within user range specified.

K = 2 Recovers hits for all disabled codes within user range specified.

K = 3 Recovers repeater airtime for all enabled codes within user range specified.

K = 4 Recovers repeater airtime for all disabled codes within user range specified.

K = 5 Recovers interconnect airtime for all enabled codes within user range specified.

K = 6 Recovers interconnect airtime for all disabled codes within user range specified.

K = 7 Resets all hit accumulations to zero within the user range specified.

K = 8 Resets all repeater time accumulations to zero within the user range specified.

K = 9 Resets all interconnect time accumulations to zero within the user range specified.

Note: Time values are in minutes and tenths of minutes. The right hand digit on the front panel or CD-2 display is tenths even though the decimal is not illuminated. For example: A display of 1648 would equal 164.8 minutes.

Examples:

*013#039#5# This command downloads interconnect airtime for all enabled interconnect subscribers from 100 Hz. (User No. 013) to 196.6 Hz. (User No. 039).

*118#140#1# This command downloads hits for all enabled repeater subscribers from DCS 423 (User No. 118) to DCS 624 (User No. 140).

*001#154#7# This command resets all hit accumulations, because the specified range is the entire 001 to 154 range of user numbers.

DISPLAY AND REMOTE BOOTING INFORMATION

DTMF DISPLAY: The display will indicate all DTMF codes that are received on the repeater input when in operate mode. However, the digital displays used in the TP154-PLUS are not capable of directly displaying the *, #, A, B, C or D. The * and # are displayed using - and ||. A, B, C and D are displayed using the numbers 1. 2. 3. and 4. Note that these are distinguishable from 1 2 3 and 4 because a decimal point accompanies the digits. The Table below shows all the DTMF digits and how they appear on the front panel display:

1 = 1	5 = 5	9 = 9	A = 1.
2 = 2	6 = 6	0 = 0	B = 2.
3 = 3	7 = 7	* = -	C = 3.
4 = 4	8 = 8	# = ||	D = 4.

REMOTE RE-BOOTING: A variety of conditions can occur (e.g. lightning) that will occasionally lock up a microprocessor. The only solution is to restart the processor.

Your TP154-PLUS has been provided with the ability to do a hard boot remotely using DTMF. If a malfunction occurs try re-booting by pressing any DTMF digit for ten or more seconds. (Re-booting will have no effect on user programming).

SPECIAL TEST MODES

1. **Test Transmission with any DCS or CTCSS:** Occasionally it may be handy to have the repeater send a carrier with any DCS code or CTCSS tone you wish for various test purposes. First enter the program mode as previously discussed. Then enter this sequence:

***nnn#99#**

Where nnn is the user number that corresponds to the tone or code you want the TP154-PLUS to transmit. See Table 2. The test transmission will last as long as you remain in program mode or until you enter a * or a new command. Don't forget that the TP154-PLUS will automatically exit program mode three minutes after the last command. You can occasionally hit any digit except * or # to extend the test mode time if desired. Enter #### when you wish to exit program mode.

2. **DCS/CTCSS display:** While at the site you may wish to have the front panel display indicate the DCS and CTCSS codes of all signals heard on the repeater input (whether enabled or not). Simply enter the following code while in operate mode:

##nnnnnn*

Where nnnnnn is the same user programmable code sequence used to enter the programming mode. The difference is that the program mode access code ends with # while the display mode sequence ends with *. If the factory programmed access code has not been changed simply enter ##123456* to activate the DCS/CTCSS display mode.

The display mode is disabled in any of the following ways:

1. By entering #### from your DTMF keypad.
2. By entering programming mode.
3. A built in software timer will automatically turn off the display mode 30 minutes after it has been enabled.

Note: The TP154-PLUS does not normally display DCS or CTCSS in operate mode to realize a significant reduction in average power consumption which is important in solar powered installations. In some applications a slight buzz in the repeat audio may be noticeable while in display mode. However this will go away as soon as display mode is turned off.

3. **Remote viewing of programmed data:** A CD-2 Decoder Unit will allow you to remotely view all programming data using the commands shown below when in programming mode...

To view per user parameters for a given user enter: *nnn#00*
To view all gang programming parameters enter: *999#00*
To view all global programming parameters enter: *000#00*
To view all speed-caller memories enter: *888#00*
To view all speed-caller memories enter: *777#00*

4. **Display all CTCSS/DCS codes enabled for interconnect usage:** To view a list of all CTCSS/DCS codes enabled for interconnect use simply enter the following sequence while in program mode..

***555#**

5. **Display all CTCSS/DCS codes enabled for repeater usage:** To view a list of all CTCSS/DCS codes enabled for repeater use simply enter the following sequence while in program mode..

***666#**

AUXILIARY RELAY

The TP154-PLUS is equipped with an auxiliary relay that can be used for customer required applications. The contacts are available on the rear panel barrier block and are labeled "RELAY". JP-7 is a three position header that allows you to select normally closed or normally open contacts.

The following choices of relay operation are made available through user programming in the global programming area.

0 = Connect	Relay is energized whenever the TP154-plus is Off-Hook.
1 = Key	Relay is energized whenever the TP154-PLUS is keying the transmitter.
2 = Remote Function	Relay is energized and de-energized in response to the user programmable three digit "Remote Function Access Code". The following format controls the relay: Relay on: #xxx Relay off: ##xxx

DEFINITION OF TERMS

ANI: Automatic Number (user) Identification

Barge in: An attempt by a different CTCSS/DCS user to cut in on or displace the current CTCSS/DCS user group. Enable 'Barge In' to allow cut in. Disable 'Barge In' to not allow another CTCSS/DCS to take over the channel.

COS: Carrier Operated Switch.

CO Line: An end to end phone line from the Central Office.

Courtesy beep: A brief tone at the end of a users transmission that lets the party you are speaking with know that it is their turn to reply.

Cross tone: Converts a user's input DCS or CTCSS to a different output DCS or CTCSS as desired.

CTCSS: Continuous Tone Coded Squelch System

CTCSS/DCS hold delay: A software timer that fills in momentary DCS or CTCSS loss when a signal is weak. When the hold delay is set to at least three seconds talk off should be nearly impossible. If there is another signal present when the mobile unkeys, the TP154-PLUS will immediately detect the new CTCSS or DCS code as incorrect and shut off the repeat audio immediately. Thus background chatter is not heard in the mobile.

Note: CTCSS Trak and CTCSS Hold delay are exclusive CSI software inventions available only in CSI panels.

CW ID: Automatic identification of call sign in Morse Code.

DCS: Digital Coded Squelch.

DCS polarity: Characteristics of receivers and transmitters can invert DCS. The TP154-PLUS has independently programmable receive and transmit invert to accommodate varying radios.

DTMF: Dual Tone Multi Frequency (Touch tone).

Hangtime: The amount of time the repeater transmitter remains on the air after a user stops transmitting.

Hog: A user or user group that monopolizes airtime.

Hog Penalty: This feature is designed to give the system manager some control over airtime hogs which may drive other customers away.

In order to use the Hog Penalty feature it is necessary to understand how it works. There are three timers which can be individually set in the global programming. These are ...

Hog monitor: This timer sets the maximum talk time a subscriber may use without incurring a no talk penalty. Warning beeps during the final thirty seconds indicate that a penalty is forthcoming if use is not quickly terminated. If the subscriber ignores the warning beeps for the full thirty seconds he is penalized by not being able to use the system for the "penalty time" duration.

Idle timer: The "hog monitor timer" is reset if the user does not use the system for the "idle time" this gives the user a clean slate. It must be noted that the "hog timer" time is cumulative, if the idle time criteria is not met.

Penalty time: If the subscriber exceeds the cumulative "hog timer" time he receives a hog penalty.

The TP154-PLUS can track the most recent five users for hog penalty. If the system operator (or any other user) enters "###", all hog timers will be cleared, allowing the penalized Hog(s) to use the system before their penalty time has expired

JP: Jumper (wire or plug) used for making a hardware selection.

Kerchunking: A kerchunker is a user that briefly hits his PTT switch to see if he can raise the repeater. Many find this practice annoying. The Anti-Kerchunking feature in the TP154-PLUS is designed to stop users who like to kerchunk. The Anti-Kerchunking filter does not affect pick-up time or repeat capability, however if a transmission is shorter than the Anti-Kerchunk time there will be no hangtime when the user unkeys.

PTT: Push To Talk. (The line that keys the transmitter).

Reserve tone: A tone in "reserve tone" status will bring up the repeater but audio will not pass.

Response delay to CD-2: The amount of time from a download request until the TP154-PLUS begins outputting a DTMF download to your CD-2 Communications Decoder Unit. This time is required if you are programming from a half duplex radio.

Stuck Mic. activity timer: Sets the maximum continuous (uninterrupted) talk time. If a user talks past the activity timer time, the repeater merely stops transmitting until the input drops and is picked up anew.

User Enable/Disable: Ability to turn a subscriber off for non payment and back on in response to payment. Sometimes it may be desirable to put a subscriber into reserve tone status rather than use the deadbeat disable. That way he will realize that he is picking up the repeater but can't talk. This may give the user a clue that they need to write a check.

Repeater Mode...

The incoming audio is buffered, de-emphasized and amplified to the amount set by the PREAMP control by input op amps U1. The audio then proceeds to a six pole low pass filter and a six pole high pass filter. The low pass filter U2 removes voice audio and extracts the DCS/CTCSS signal for detection at the adaptive differential comparator. The comparator output is fed to the microcomputer U17 pin 12 for software DCS/CTCSS detection. The six pole high pass filter (U3) removes CTCSS and DCS from the incoming audio to avoid retransmission of CTCSS or DCS. The audio from the high pass filter continues through the squelch switch U7 and on to the audio output amplifier U3.

The COS input is buffered and compared to a reference voltage which is set by the COS threshold pot. The output then proceeds to the polarity select strap JP-10 and then to the microcomputer U17 pin 32.

DTMF is decoded and regenerated by U18 with some assistance from the microcomputer U17.

DCS is generated directly by the microcomputer U17. CTCSS is generated by waveform generator U14. The microcomputer U17 controls the U14 waveform generator via pins 34, 35 and 36. DCS and CTCSS have separate level controls the output of each is fed to summation amplifier and four pole low pass filter U5. The output of U5 feeds the transmitter modulator with the SUBTONE output.

The PTT circuit consists of Q6, Q7 and Q15. This circuit is controlled by the I/O shift register U16 which is in turn controlled by microcomputer U17 via pins 7, 8 and 28. Polarity select strap JP-4 gives the choice of ground keying or plus keying.

A power on reset circuit consisting of Q8 and associated components monitors the input voltage and quickly halts the microcomputer if the applied input voltage is too low. The power on reset circuit provides proper computer start up after power is applied and protects the EE memories U21 and U22 on power up and down.

Counters U26 and U27 divide the 448 KHz clock from U18 and allow remote re-booting of the microprocessor when any incoming DTMF digit exceeds 9 seconds in duration. At the end of nine seconds U27 pin 15 turns on transistor Q5 which in turn enables the power on reset circuit.

The front panel digital display U6-U9 are controlled by the display driver U5. The microcomputer U17 talks to U5 via pins 3, 4 and 28.

Incoming power is fed through reverse polarity protect diode D5 and then fuse F1. From there the +V voltage feeds a +5 volt regulator U8 used by the digital components. Another smaller +5 volt regulator U9 is used to supply bias and reference voltage to the analog op-amps etc.

Interconnect mode...

Many of the repeater mode signal paths are also used in interconnect operation. Here are is a brief description of the interconnect specific circuits.

Mobile audio is passed through the M->L level control P9 and squelch switch U7 to line driver U6 which drives the two transformer duplex hybrid. Phone line audio from the hybrid is amplified by U5 and passes along to the L->M level control P10 and then on to the TX audio driver U3. Some of the output of U5-1 is processed by U6 and Q9 and feeds the microprocessor U17 pin 33. The microprocessor constantly analyzes this processed signal for the presence of dialtone and/or busy signals.

The LINE input is the shared line and passes through lightning protect network fuses F2, F3 and MOV's M1, M2. U11 senses ringing on the shared line and notifies the microprocessor U17 on pin 5. U12 detects the On or Off hook condition of the shared line and notifies the microprocessor U17 on pin 6.

Relay K1 connects the phone line via control from the I/O shift register U16. The EXP input allows external EX-8 Expanders to connect directly to the hybrid transformers.

Land to mobile and Mobile to mobile signalling tone are generated by U13 under control of the microprocessor U17 via pins 37, 38 and 39.

About the hybrid...

Transformers T1 and T2 are proper telephone hybrid transformers that are connected so that mobile audio passes to the phone line, however self cancels and is largely rejected from feeding the transmitter. This helps to prevent audio oscillation in a full duplex mobile. Audio arriving from the phone line is simply amplified by U5 and flows toward the TX audio output. The hybrid balance control P12 and dip switch selectable capacitors C55-58 allow achieving the best possible trans-hybrid null by simulating the complex impedance of the phone line with the best possible impedance model.

MODEL EX-8
EIGHT LINE EXPANDER
(Option)

The EX-8 is an eight line in, one line out fully automatic switch box that allows eight private phone lines to be brought into the TP154-PLUS. Additional EX-8's (up to eight total) can be added to bring in as many as 64 private or OPX lines. (Off Premise Extension).

INSTALLATION: The EX-8 (or EX-8's) may be mounted in the same rack with the TP154-PLUS, or you can remove the front panel (two screws) and mount the EX-8 on your telephone board.

The EX-8 (or multiple) EX-8's must be connected as shown in the hook-up diagram page 49. Each EX-8 will need 12 VDC (share the same supply that runs the TP154-PLUS). Then connect the TP154-PLUS RJ-11 jack labeled EXP to the EX-8 jack labeled EXP IN. If you are using more than one EX-8, daisy chain EXP OUT from the first unit to the EXP IN of the second unit, etc. as shown.

Note: The modular cords used to patch the EX-8's to each other and to the TP154-PLUS must have four wires and be normal polarity. A cord having normal polarity has the modular plug retainer clips on the same side of the flat cable. The four foot cord provided with each EX-8 is the correct type, please use it unless it is too short for your installation.

SET UP: Each EX-8 must have a specific address code which is set by dip switches in each EX-8. The first EX-8 in the chain must have address 1. THIS IS VERY IMPORTANT. The next EX-8 must have address 2 and so on, up to 8.

To set the dip switches, ignore anything written on the switches. Use the 8421 code which is silk screened on the board. The 1 position is toward the nearest board edge. The 0 position is toward the distant edge.

EX-8 ADDR	DIP SW 8421	PHYSICAL SETTINGS
1	0001	DN DN DN UP
2	0010	DN DN UP DN
3	0011	DN DN UP UP
4	0100	DN UP DN DN
5	0101	DN UP DN UP
6	0110	DN UP UP DN
7	0111	DN UP UP UP
8	1000	UP DN DN DN

TABLE 6

EX-8 DIP SWITCH SETTINGS

The physical settings assume that you are viewing the board with the dip switch at the top and the phone jacks on the left.

Note: This table will be wrong if the dip switch is installed wrong. The side labelled "OFF" must be toward the board edge.

LINE 'BUSY OUT' JUMPERS: When any EX-8 line is in use all other EX-8 lines are automatically busied out. That way any line will appear busy if someone is using another line. This is a good solution if the line is a private line. However if a line (such as an OPX line) also has telephones or telephone equipment on it then the EX-8 will busy out this line and calls will be missed.

Jumpers JP-1 through JP-8 determine whether lines 1-8 can be automatically busied out or not. When the jumpers are in the shorted position (as factory shipped) the lines will be automatically busied out. A line that should not have the busy out feature should have the appropriate jumper removed.

For Example: A subscribers OPX line is plugged into line port 52. This is line 2 of EX-8 having dip switch address 5. Simply remove JP-2 (for line 2) in the appropriate EX-8.

LINE PORT PROGRAMMING: Each phone line plugged into an EX-8 has a unique line port address which must be set in the corresponding Per Subscriber programming area.

The line port is a two digit number. The first digit is the same as the EX-8 address (The dip switch setting determines the address). The second digit is the line number the phone line has been plugged into.

Assume a subscribers' phone line is plugged into Line 5 on one of the EX-8's, and this particular EX-8 has address 2. (Remember that the dip switch sets the EX-8 address). The line port in this case is 25 which must be programmed into the subscribers Per Subscriber programming. This entry allows the TP154-PLUS to know which lines belong to which subscribers.

Example: A phone call arrives at line port 25. The EX-8 communicates with the TP154-PLUS over a serial channel and indicates there is an incoming call on line port 25. The TP154-PLUS in turn looks into the per subscriber memory to find out which subscriber this call belongs to. The TP154-PLUS then rings out using the DCS or CTCSS code of the recipient subscriber.

CHECKING EX-8 ADDRESSES: When the power is turned on, the TP-154 checks to see if there are any EX-8's connected. If one or more are found their addresses are displayed briefly shortly after power up.

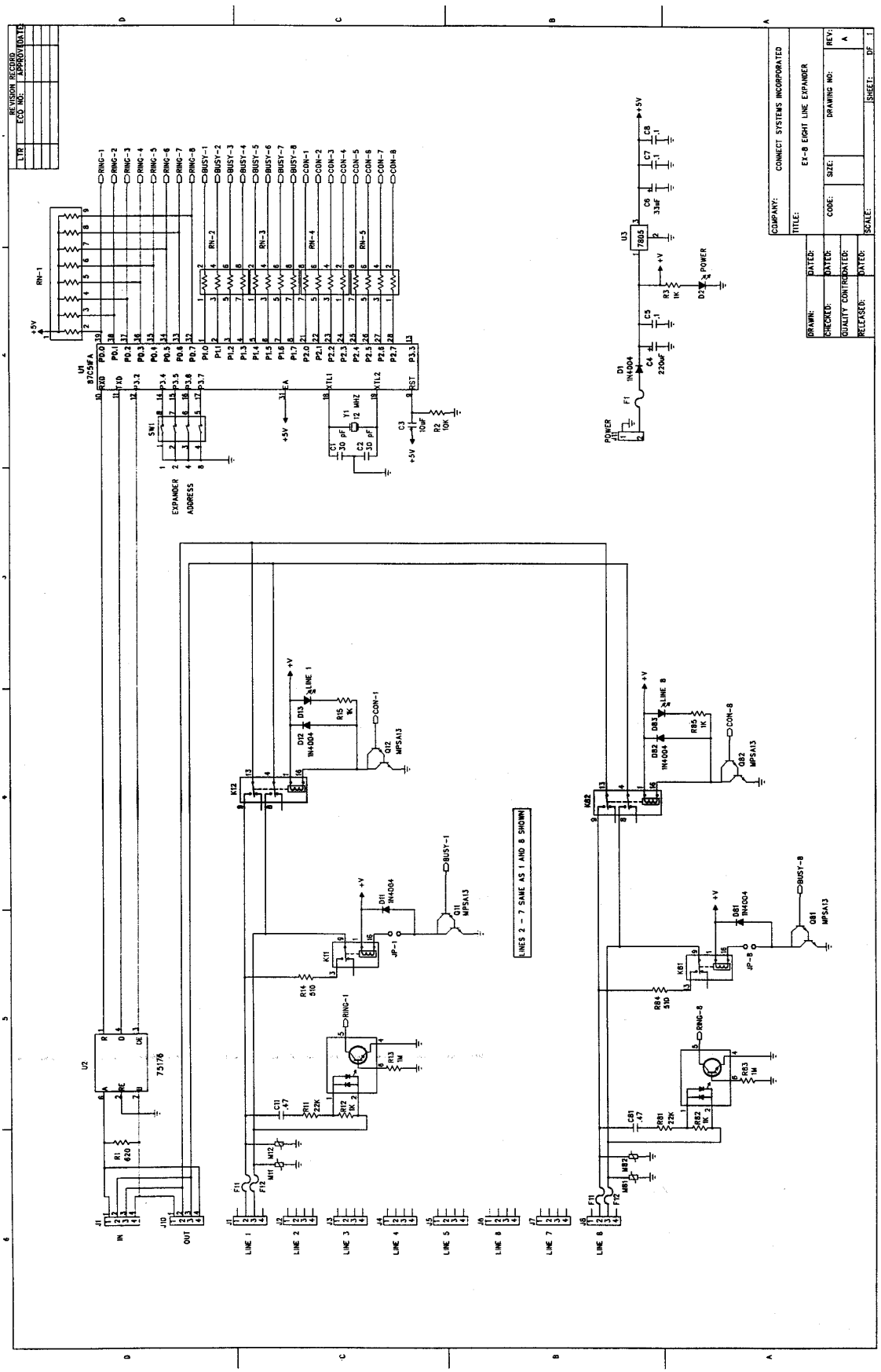
REVISION RECORD
LTR
ECO NO:
APPROVED/DATE
COMPANY: CONNECT SYSTEMS INCORPORATED
TITLE: EX-8 EIGHT LINE EXPANDER
DRAWN: DATED:
CHECKED: DATED:
QUALITY CONTROL: DATED:
RELEASED: DATED:
CODE:
SIZE:
DRAWING NO:
REV: A
SCALE:
SHEET: OF 1
LINES 2 - 7 SAME AS 1 AND 8 SHOWN
EXPANDER ADDRESS
POWER
IN
OUT
LINE 1
LINE 2
LINE 3
LINE 4
LINE 5
LINE 6
LINE 7
LINE 8

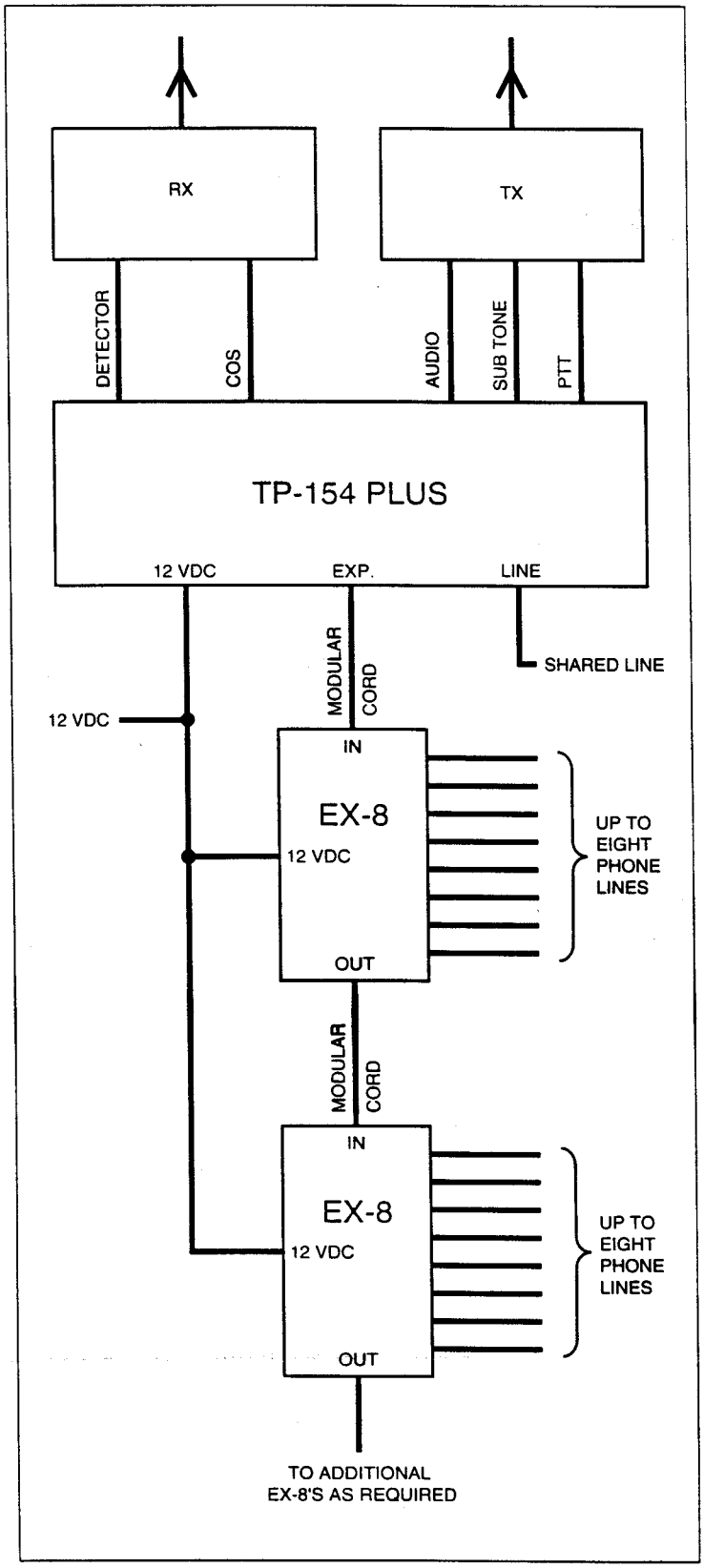

TP-154 PLUS and **EX-8** connection diagram

LIMITED WARRANTY

Connect Systems Inc. (CSI) hereby warrants our products to be free from defective workmanship for a period of one year and defective parts for a period of five years from date of sale to the initial end user. This warranty applies only to the original consumer / end user purchaser of each CSI product. During the first year of warranty, CSI will repair any of its products at no charge providing the defective unit is returned prepaid to Connect Systems Inc. During the years 2-5, there shall be no charge for replacement parts providing that the defective unit is shipped prepaid and service is performed by CSI. Conventional prevailing labor and shipping charges will apply following the end of the first year. CSI, at its sole discretion, will replace defective parts on an exchange basis for the first five years of ownership by the original purchaser. All shipping costs are the responsibility of the customer.

What is not covered by this limited warranty:

This warranty shall not apply if, in our judgment the defects are caused by misuse, lightning strikes, customer modification, water damage, negligent use, improper installation, overloads caused by external voltage fluctuations, use of unregulated power supply, damage caused in transit or handling or any abusive treatment not in accordance with ordinary product use or the product serial number has been removed, altered or defaced.

THIS WARRANTY IS IN LIEU OF ALL OTHER WARRANTIES, STATEMENTS OR REPRESENTATIONS, AND UNLESS STATED HEREIN, ALL SUCH WARRANTIES, STATEMENTS OR REPRESENTATIONS MADE BY ANY OTHER PERSON OR FIRM ARE VOID. ALL IMPLIED WARRANTIES IN CONNECTION WITH THE SALE OF THIS EQUIPMENT, INCLUDING THE WARRANTY OF MERCHANTABILITY, SHALL BE OF THE SAME DURATION AS THE WARRANTY PERIOD STATED ABOVE. SOME STATES D0 NOT ALLOW LIMITATIONS OF HOW LONG AN IMPLIED WARRANTY LASTS, SO THE ABOVE LIMITATION MAY NOT APPLY TO YOU. IN THE EVENT OF PRODUCT FAILURE WHICH PROVES TO BE CAUSED BY A DEFECT IN WORKMANSHIP OR MATERIALS, YOUR SOLE REMEDY SHALL BE THE REPAIR OF THE DEFECT BY CSI OR ITS APPOINTED REPAIR STATION AS STATED IN THIS WARRANTY, AND UNDER NO CIRCUMSTANCES SHALL CSI BE LIABLE FOR ANY LOSS OR DAMAGE, DIRECT, INCIDENTAL, OR CONSEQUENTIAL, ARISING OUT OF THE USE, OR INABILITY TO USE, THIS CSI PRODUCT. SOME STATES D0 NOT ALLOW THE EXCLUSION OR LIMITATION OF INCIDENTAL OR CONSEQUENTIAL DAMAGES, SO THE ABOVE LIMITATION OR EXCLUSION MAY NOT APPLY TO YOU.

If your new CSI product should ever fail, contact Connect Systems Inc. Customer Service Dept. for repair and warranty information at (805) 642.7184.

Note: Connect Systems Inc. reserves the right to render a modest service charge when returned units are found to be free of parts or workmanship defect(s) (i.e. operating to factory specifications) within the first year of the warranty. Such units will be returned freight collect to the sender, including the appropriate service charge.

APPENDIX A

FCC NOTICE TO USERS

1. This equipment complies with part 68 of the FCC rules. On the bottom of this equipment is a label that contains, among other information, the FCC registration number and ringer equivalence number (REN) for this equipment. If requested, this information must be provided to the telephone company.

2. The REN is used to determine the quantity of devices which may be connected to the telephone line. Excessive REN's on the telephone line may result in the device not ringing in response to an incoming call. In most, but not all areas, the sum of the REN's should not exceed five (5.0). To be certain of the number of devices that may be attached to the line, as determined by the total REN's contact the telephone company to determine the maximum REN for the area.

3. If this product causes harm to the telephone network, the telephone company will notify you in advance that temporary discontinuance of service may be required. But if advance notice isn't practical, the telephone company will notify the customer as soon as possible. Also, you will be advised of your right to file a complaint with the FCC if you believe necessary.

4. The telephone company may make changes in it's facilities, equipment, operations, or procedures that could affect the operation of the equipment. If this should happen, the telephone company will provide advance notice in order for you to make the necessary modifications in order to maintain uninterrupted service.

5. If trouble is experienced with this product, please contact Connect Systems Incorporated at (805) 642-7184 for repair and warranty information. If the trouble is causing harm to the telephone network, the telephone company may request you remove the equipment from the network until the problem is resolved.

6. There are no repairs that can be accomplished by the user. In the event of operation problems, disconnect your unit by removing the modular plug from the telephone company modular jack. If your regular telephone still works correctly, your unit has a problem and should be returned for repairs (in or out of warranty). If upon disconnection of your unit there is still a problem on your line, notify the telephone company that they have a problem and request prompt repair service. The unit may be returned to Connect Systems Incorporated, 2259 Portola Rd. Ventura, CA 93003.

7. This interconnect product cannot be used on a public coin service provided by the telephone company. Connect to Party Line Service

is subject to state tariffs. Contact the state public utility commission, public service commission or corporation commission for information.

8. This device complies with part 15 of the FCC rules. Operation is subject to the following two conditions: (1) This device may not cause harmful interference, and (2) This device must accept any interference received, including interference which may cause undesirable operation.

9. This equipment generates and uses radio frequency energy and if not installed and used properly, i.e. in strict accordance with the service manual, may cause interference to radio or television reception. It has been tested and found to comply with the limits for a Class B computing device pursuant to Subpart J of Part 15 of FCC rules, which are designed to provide reasonable protection against such interference when operated in a residential installation.

10 If this equipment does cause interference to radio or television reception, which can be determined by turning the equipment off and on, the user is encouraged to try to correct the interference by one or more of the following measures:

   a. Reorient the receiving antenna.

   b. Relocate the equipment with respect to the receiver.

   c. Move the equipment away from the receiver.

   d. Plug the equipment into a different outlet so that equipment and receiver are on different branch circuits.

   e. Ensure that card mounting screws, attachment connector screws,and ground wires are tightly secured.

   f. If cables not offered by this company are used with this equipment, it is suggested that you use shielded, grounded cables with in line filters, if necessary.

   g. If necessary consult your dealer service representative for additional suggestions.

11 The manufacturer is not responsible for any radio or TV interference caused by unauthorized modifications to this equipment. It is the responsibility of the user to correct such

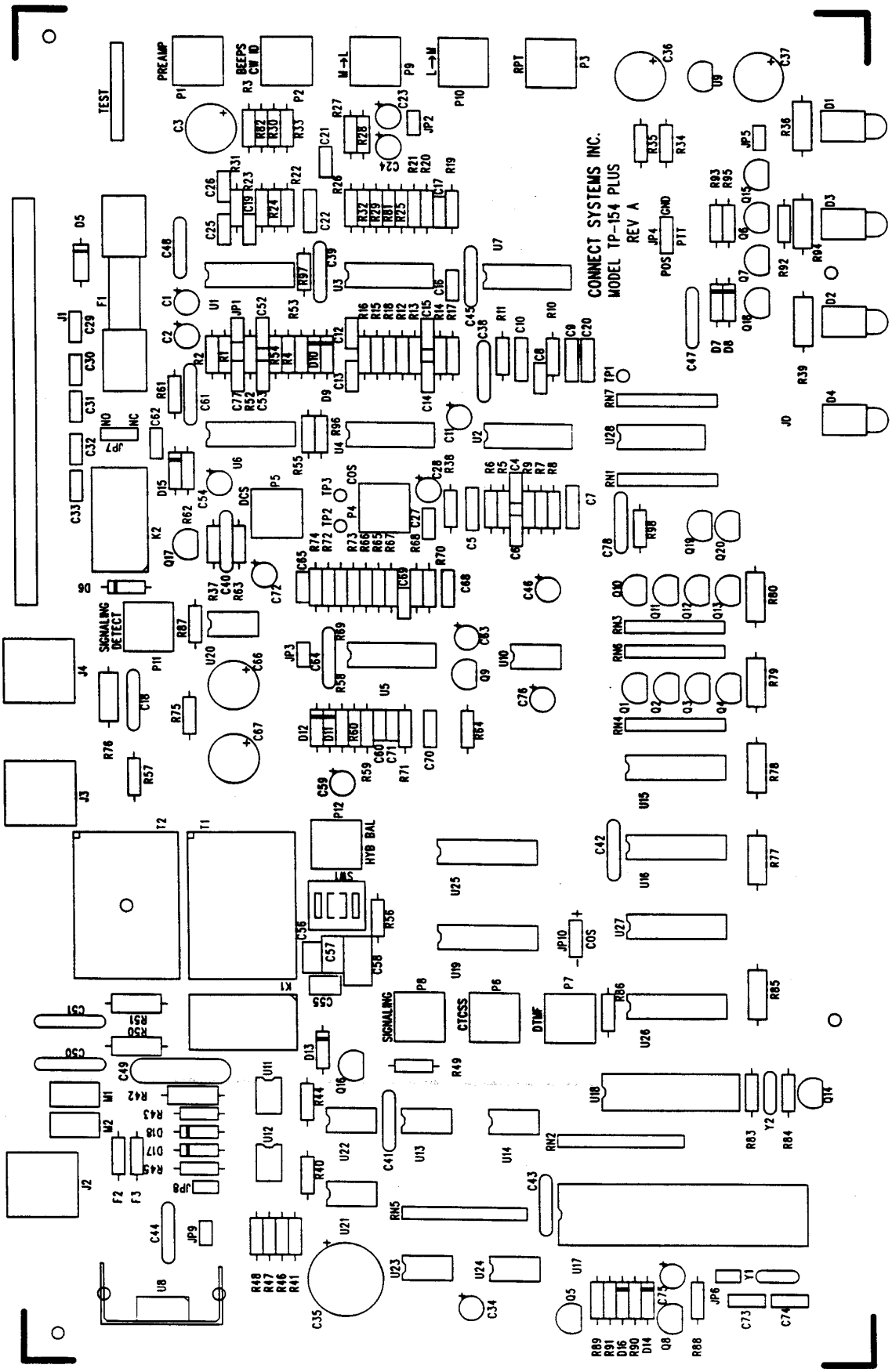
CONNECT SYSTEMS INC.
MODEL TP-154 PLUS
REV A
PREAMP
BEEPS
CW ID
M→L
L→M
RPT
TEST
SIGNALING DETECT
HYB BAL
SIGNALING
CTCSS
DTMF
COS
DCS
POS
GND

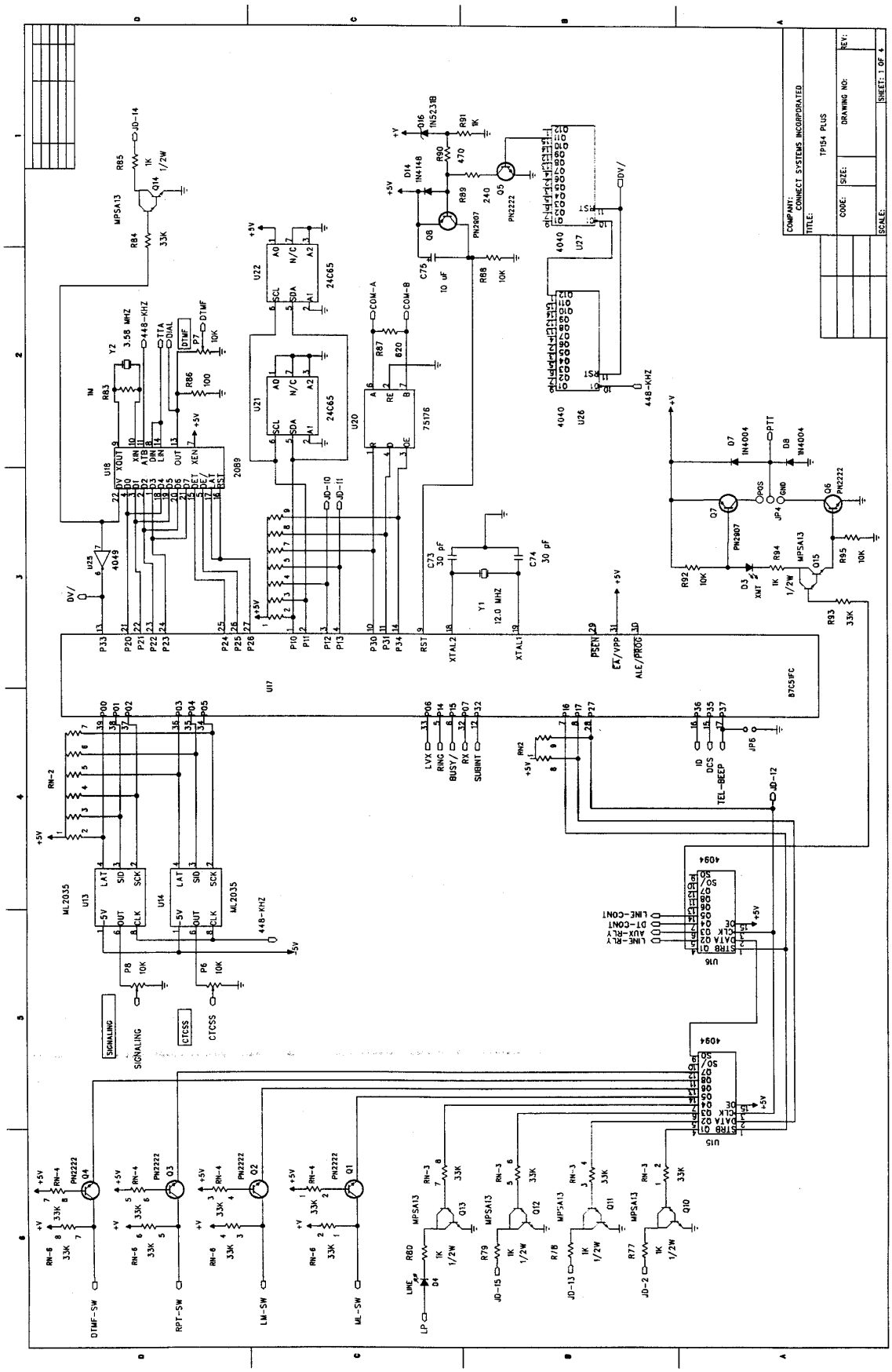
COMPANY: CONNECT SYSTEMS INCORPORATED
TITLE: TP154 PLUS
CODE:
SIZE:
DRAWING NO:
REV:
SCALE:
SHEET: 1 OF 4
U17
B7C51FC
U18
2089
U20
75176
U21
24C65
U22
24C65
U25
4049
U26
4040
U27
4040
U13
ML2035
U14
ML2035
U15
4094
U16
4094
Y1
12.0 MHZ
Y2
3.58 MHZ
448-KHZ
SIGNALING
CTCSS
DTMF-SW
RPT-SW
LM-SW
ML-SW
LP
LINE
PTT
POS
GND
XMT
LVX
RING
BUSY/
RX
SUBINT
ID
DCS
TEL-BEEP
LINE-CONT
DT-CONT
AUX-RLY
LINE-RLY
COM-A
COM-B
DTMF
DTMF
TTA
DIAL
XEN
DV/
+5V
-5V

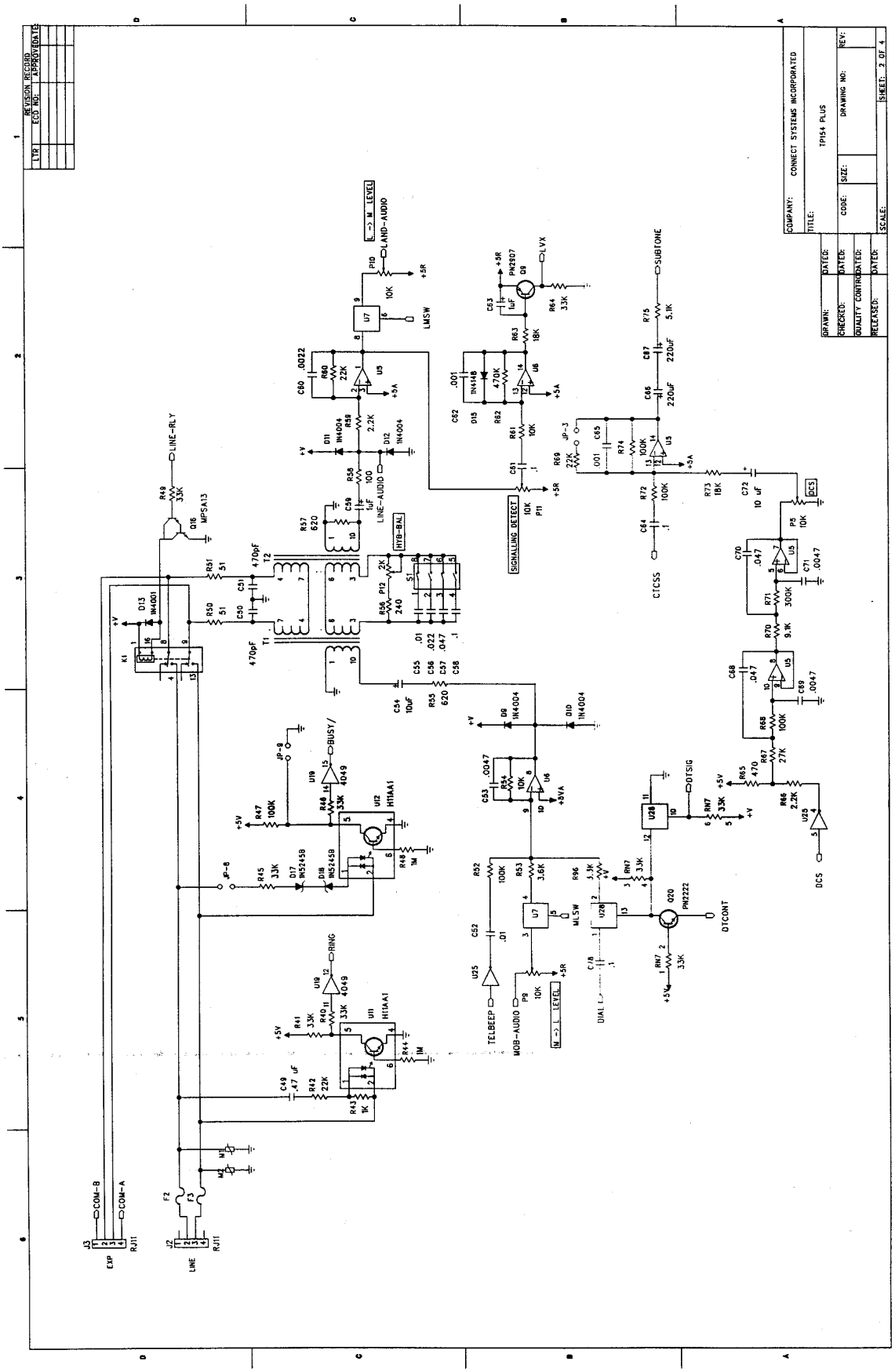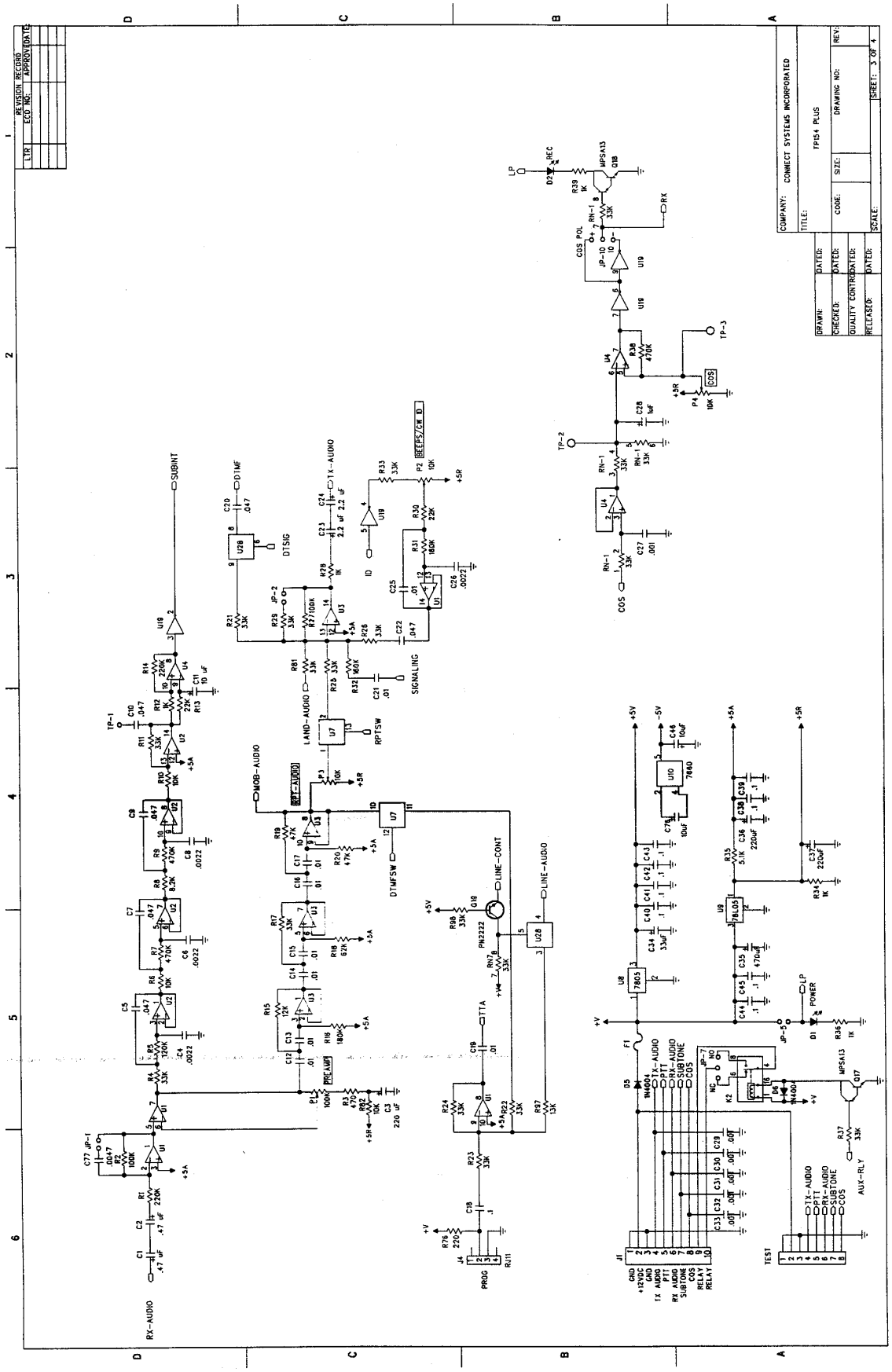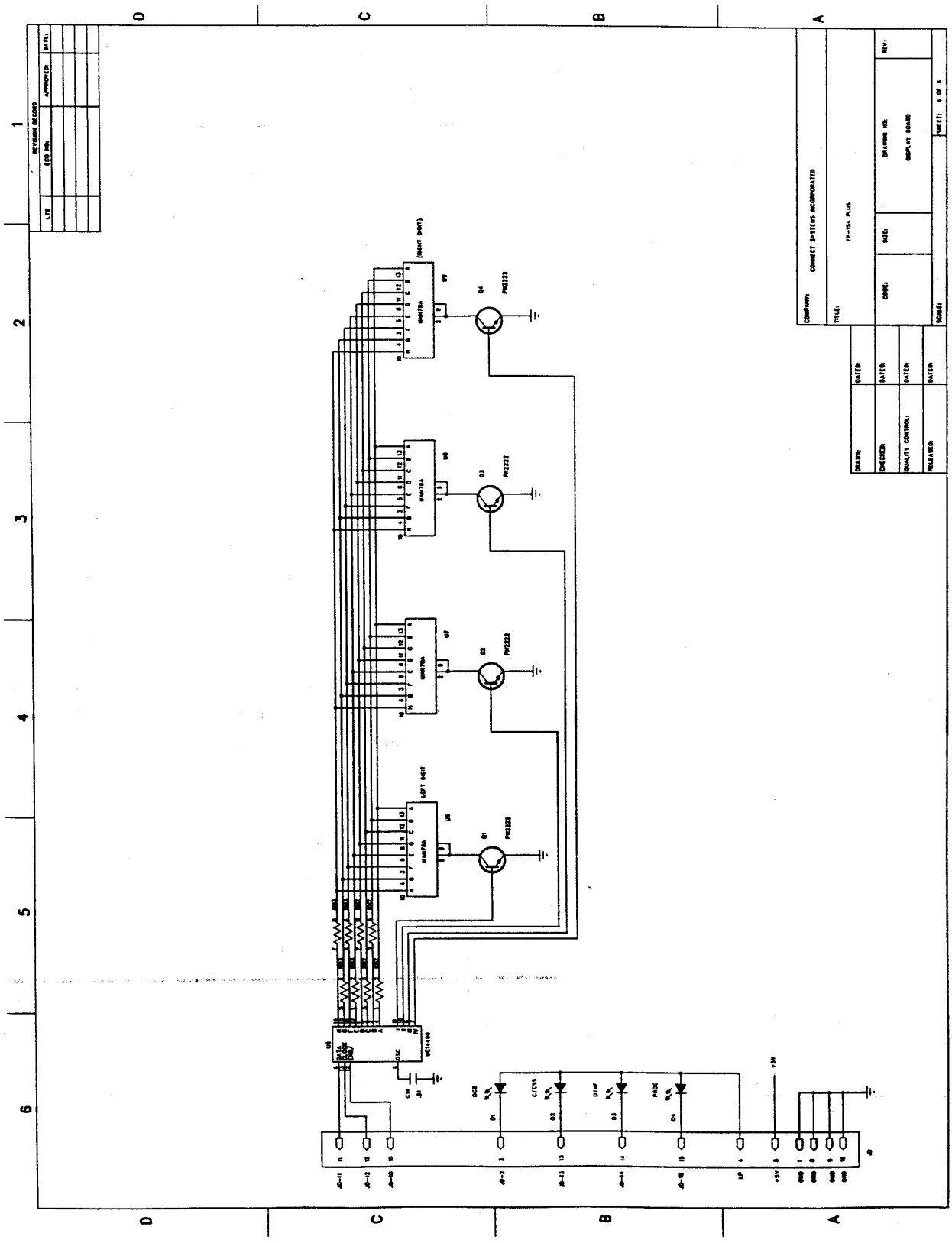
REVISION RECORD
LTR
ECO NO:
APPROVED
DATE
COMPANY:
CONNECT SYSTEMS INCORPORATED
TITLE:
TP154 PLUS
CODE:
SIZE:
DRAWING NO:
REV:
SCALE:
SHEET: 2 OF 4
DRAWN:
CHECKED:
QUALITY CONTROL
RELEASED:
DATED:
LAND-AUDIO
LMSW
LVX
SUBTONE
LINE-RLY
LINE-AUDIO
HYB-BAL
SIGNALLING DETECT
CTCSS
DCS
BUSY/
RING
DTSIG
DTCONT
TELBEEP
MOB-AUDIO
DIAL
COM-B
COM-A
EXP
LINE